HYBRID RECORDER

HR-706

(DOT PRINTING)

INSTRUCTION MANUAL

Shinko

For safe use

Thank you for purchasing our HR-706 type Hybrid Recorder.

In order for this instrument to function effectively and correctly, please read and understand this instruction manual thoroughly before using the instrument.

This instrument should be used in accordance with the instructions described in the manual. If it is not used according to the instructions, it may malfunction or its protection function will be compromised.

The symbols below are used on this instrument for caution information.

Symbols used on the instrument	
	This indicates “Caution”. Please refer to the instruction manual when handling parts with this symbol for protection of both the human body and instrument.
	This indicates “Protective grounding”. Be sure to provide protective grounding prior to the operation of this instrument.
	This indicates “Risk of electric shock”. This symbol is used on the parts which have a risk of electric shock.

The symbols below are used on the warning and cautioning information in this manual.

Symbols used in this manual	
⚠ **WARNING**	Failure to observe this information could result in death or injury. Be sure to read this.
⚠ **CAUTION**	Failure to observe this information could damage the instrument. Be sure to read this.
[Note]	This is cautionary information for correct use of the instrument. Be sure to read this.
[Reference]	This is information about the functions of this instrument for effective use.

Be sure to observe the following warnings/cautions and those written in this manual in order to ensure safety when using this instrument.

⚠ WARNING

General

(1) In order to prevent electric shock, be sure to disconnect this instrument from the main power source when wiring it.
(2) When this instrument is incorprated in a system, and if the system is expected to be affected by malfunction from the recorder or external factor, take preventive measures to secure the safety of the system.
(3) Take measures so that foreign objects cannot enter the opening section.

Protective Grounding

(1) In order to prevent electric shock, be sure to provide protective grounding prior to turning on this instrument.
(2) Do not cut protective grounding conductors or disconnect protective grounding.

Power Source

(1) Make sure that the supply voltage for this instrument conforms to the voltage of the supply source.
Rated power supply: 10 to 240 V AC
Allowable voltage fluctuation: 85 to 264 V AC
Power frequency: 50/60 Hz
Power consumption: 30 VA max.
(2) Attach protective covers prior to turning on this instrument.
(3) Power supply module used in this instrument complies with EN60950.

Working Environment

(1) Do not operate this instrument in an environment where it is exposed to combustible/explosive/corrosive gas or water/steam.
(2) Use this instrument in the following environment.
Installation site: Indoor
Altitude: 2000 m max.
Ambient temperature: 0 to 50℃
Ambient humidity: 20 to 80 %RH (Non-condensing)
Overvoltage category Ⅱ
Pollution degree Ⅱ

Input and Output Wiring

Provide input and output wiring after turning off the power.

⚠ CAUTION

Input and Output Wiring	Do not use unused terminals for any other purposes.
Transportation	When transporting this instrument, or the equipment with this instrument incorporated in it, take measures to prevent the door opening and the inner module falling out.
Inside of Instrument	Do not touch the switches, etc. inside this instrument. Also, do not replace the main unit or printed circuit boards. If this is ignored, we cannot guarantee the correct functioning of the instrument. Contact our dealer where you purchased the instrument, or our sales representative.

[Note]

Instruction manual	(1) Deliver this instruction manual to an end user. (2) Prior to handling this instrument, be sure to read this manual. (3) If you have any questions about this manual or find any errors or omissions in this manual, contact our sales representative. (4) After reading this manual, keep it in close proximity to the instrument. (5) If the manual becomes lost or stained, contact our sales representative. (6) It is prohibited to copy or reproduce this manual without our permission.
Installation	(1) When installing this instrument, put on protective gear such as safety shoes, helmet, etc. (2) Do not step on the installed instrument or get on top of it, as this is dangerous.
Maintenance	Only our servicemen or engineers authorized by Shinko are allowed to remove and take apart the inner module, the main unit and printed circuit boards.
Disposal	(1) Dispose of the replaced batteries in a correct way. (2) Do not incinerate plastics from the maintenance parts or replacement parts. Harmful gases may be produced.
Cleaning	(1) Use a dry cloth to clean the surface of this instrument. (2) Do not use any organic solvent. (3) Clean the instrument after the power is turned off.
Revisions	This instruction manual is subject to change without prior notice.

⚠ SAFETY PRECAUTIONS

- To ensure safe and correct use, thoroughly read and understand this manual before using this instrument.
- This instrument is intended to be used for industrial machinery, machine tools and measuring equipment. Verify correct usage after purpose-of-use consultation with our agency or main office. (Never use this instrument for medical purposes with which human lives are involved.)
- Proper periodic maintenance is required.
- This instrument must be used under the conditions and environment described in this manual. Shinko Technos Co., Ltd. does not accept liability for any injury, loss of life or damage occurring due to the instrument being used under conditions not otherwise stated in this manual.

Caution with respect to Export Trade Control Ordinance

To avoid this instrument from being used as a component in, or as being utilized in the manufacture of weapons of mass destruction (i.e. military applications, military equipment, etc.), please investigate the end users and the final use of this instrument. In the case of resale, ensure that this instrument is not illegally exported.

Using this manual

Using this manual

This instruction manual consists of “For safe use”, “Contents” and “Chapter 1 to Chapter 11” as below. Please read the corresponding sections depending on your purpose of use.

Chapter and title	For purchase and installation	For initial setting and setting change	For daily operation	For communication	For maintenance and troubleshooting
For safe use (page 1)	◎	◎	◎	◎	◎
1. INTRODUCTION	◎				
2. CONSTRUCTION	O	O	O		O
3. INSTALLATION	◎		O		
4. WIRING	◎	O	O	O	O
5. PREPARATIONS FOR OPERATION		O	◎		
6. OPERATION		O	◎		
7. DEVICE SETTING		◎		O	O
8.COMMUNICATION				◎	
9. MAINTENANCE					◎
10. TROUBLESHOOTING		O			◎
11. SPECIFICATIONS	O	O			O

◎: Be sure to read this.

O: Be sure to read this if required.

Guide of Instruction manual

The instruction manuals of this instrument are as the table below.

This manual ⇨

	Name	Edition No.	Outline
1	HR-706 Hybrid Recorder (Multipoint type) instruction manual	No.HR71E	Explanation for installation, wiring, standard operation. Setting and operation for using this instrument.
2	HR-700 Hybrid Recorder Communication Command instruction manual	No.HR7CE	Explanation for reading and writing data of the recorder by communication function.

Initial setting checking list

After installing and wiring the HR-706, the following items are the minimum required setting items before running.

	Checking item	Default value	Reference
1	**Range setting** Check the range setting.	±10 mV DC (All channels)	pp.45-47
	Scaling setting is required for the following cases. • When converting the input into another physical quantity • When changing the decimal point position for the thermocouple and RTD input • When changing unit	Scaling 0 to 100.0 (Unit ℃) (All channels)	pp.48-49
2	**Unit setting** Check the unit.	Unit ℃ (All channels)	pp.58-59
3	**Chart feed speed setting** Check the Chart feed speed.	The 1st chart speed: 20 mm/h The 2nd chart speed: 20 mm/h	p.60
4	**Date and time setting** Check the date and time.	Jan. 1st, 2000, 00:00 (Hour:Minute)	p.61

CONTENTS

1. INTRODUCTION 6
1.1 Checking the Accessories 6
1.2 Checking the Model Type and Specifications 7
1.3 Temporary Storage 8
1.4 Location ID tag 8

2. CONSTRUCTION 9
2.1 Appearance 9
2.2 Display and Operation Keys 10
2.2.1 Display 10
2.2.2 Operation Keys 11

3. INSTALLATION 12
3.1 External dimensions and panel cutout 12
3.2 Panel Mounting 13
3.2.1 Procedure for Panel Mounting 13
3.2.2 Panel Mounting in compliance with the IP65 14

4. WIRING 15
4.1 Terminal arrangement and Power Wiring 15
4.1.1 Terminal arrangement 15
4.1.2 Power Wiring 15
4.1.3 Wiring Procedure 16
4.2 Input Wiring 17
4.2.1 Wiring Procedure 18
4.3 DI function/Alarm Output Wiring (Option) 20
4.3.1 DI function/Alarm Output Wiring Example 20
4.3.2 Alarm Output Wiring Procedure 21
4.3.3 DI Function Wiring Procedure 21
4.4 Communication Wiring 22
4.4.1 RS-232C Wiring 22
4.4.2 RS-485 Wiring 22

5. PREPARATIONS FOR OPERATION 23
5.1 Setting the Chart Paper 23
5.2 Setting the Ribbon Cassette 29

6. OPERATION 31
6.1 Operation 31
6.1.1 Status after Initial Screen 31
6.2 Recording 32
6.2.1 Recording Colors 32
6.3 How to Record 32
6.3.1 Starting/Stopping Recording 32
6.3.2 Feeding the Chart Paper 32
6.3.3 Printing Sample 33
6.4 Digital Printing 34
6.4.1 Manual Printing 34
6.4.2 List Printing 35
6.4.3 Engineering List Printing 37
6.4.4 Recording Start/Stop Printing 39
6.4.5 DI Manual Printing (DI option) 39
6.4.6 DI Date/Time Printing (DI option) 39
6.4.7 DI Comment Printing (DI option) 40
6.5 Changing the Display 41
6.5.1 Auto Display <AUto> 41
6.5.2 Manual Display <mAn> 41
6.5.3 Date Display <dAtE> 41
6.5.4 Time Display <ti mE> 41
6.5.5 Display Off <oFF> 41

7. DEVICE SETTING 42
7.1 Setting the Setup Mode 42
7.1.1 Setting the Range 45
(1) Setting Method 45
(2) volt (Current/Voltage), tC (Thermocouple), rtd (Resistance Temperature Detector) 46
(3) SCALE (Scaling) 48
(4) Sqrt (Square Root) 50
(5) dECAd (Decade) 52
(6) dELt (Difference), SUM (Sum), mEAn (Average) 54
(7) SKIP (Skip) 55
7.1.2 Setting the Alarm 56
7.1.3 Setting the Unit 58
(1) Character Code Table 59
7.1.4 Setting the Chart Feed Speed 60
7.1.5 Setting the Date and Time 61
7.1.6 Copying the Setting Data 62
7.1.7 Setting Other Functions 63
(1) trEnd (Printing Cycle) 64
(2) ZonE (Zone Recording) 64
(3) PArt (Partial Compression/Expansion) 65
(4) Print (Digital Printing) 66
(5) tAG (Tag) 67
(6) Cmnt (Comments) 68
7.2 Setting Engineering Mode 69
7.2.1 Alarm Hysteresis 72
7.2.2 Burnout ON/OFF 72
7.2.3 Channel Offset 72
7.2.4 Reference Junction Compensation 73
7.2.5 Changing the Printing Color 74
7.2.6 Settings Related to Recording 74
(1) Recording RUN/STOP Trigger Setting 74
(2) Channel/tag Printing Selection 75
(3) Alarm Printing ON/OFF 75
(4) Logging Printing ON/OFF 76
(5) Scale Printing ON/OFF 77
(6) Recording Start/Stop Printing 77
7.2.7 Setting the Communication Function 78
7.2.8 Initializing the Setup Data 78
7.2.9 DI functions 79
7.2.10 Temperature Unit Selection 81
7.2.11 Point Calibration 81
7.2.12 Data Calibration 83
7.3 Terminating the Engineering Mode 85

8. COMMUNICATION.....86
8.1 General Description 86
8.1.1 General Description of Functions.....86
8.1.2 Transmission Specifications.....86
8.2 Original Protocol 86
8.2.1 Data Structure 86
8.2.2 Opening/Closing the Link.....87
(1) Open Command.....87
(2) Close Command 87
8.2.3 Outputting the Process Variable.....88
(1) Specifying the Process Variable Output.....88
(2) Updating the Data.....88
(3) Specifying the Process Variable Output Order (At BINARY Mode Output).....88
(4) Outputting the Data 88
(5) Process Variable Transmission Format (ASCII) 89
(6) Process Variable Transmission Format (BINARY) 90
8.2.4 Outputting the Unit and Decimal Point Position Data 91
(1) Specifying the Unit and Decimal Point Position Data Output.....91
(2) Updating the Data.....91
(3) Outputting the Data 91
(4) Data Format 91
8.2.5 Outputting the Status.....92
(1) Status Output Command.....92
(2) Status Output 92
8.2.6 Data Reception Example.....93
8.3 MODBUS RTU Protocol.....94
8.3.1 Data Structure.....94
8.3.2 Function Codes.....94
8.3.3 Error Response.....94
8.3.4 Reading from the Input Register Area.....95
8.3.5 Reading from or Writing to the Holding Register Area...98

9. MAINTENANCE 99
9.1 Inspection 99
9.2 Cleaning.....99
9.3 Replacing Consumables 100
9.4 Adjusting Dot Printing Position (Point Calibration).....100
9.5 Calibration (Data Calibration) 100
(1) Calibration of Voltage.....101
(2) Calibration of RTD (Resistance temperature detector) 101
(3) Calibration of Reference Junction Compensation 102

10. TROUBLESHOOTING 103
10.1 Troubleshooting 103
10.1.1 Problems 103
10.1.2 When the Recorder Dose not Work at All 103
10.1.3 When There is a Large Error 104
10.1.4 When the Trend Recording is Deflected 104
10.1.5 When Nothing is Recorded.....105
10.1.6 When Printing is Faint.....105
10.1.7 When the Chart Paper is not Fed at All.....106
10.1.8 When the Chart Paper is not Fed Properly 106
10.2 Self-Diagnosis Function (ERROR).....107
10.2.1 Self-Diagnosis Items.....107
10.2.2 Error Display.....108

11. SPECIFICATIONS 109
11.1 Common Specifications.....109
11.1.1 Input Signal.....109
11.1.2 Performance and Characteristics.....109
11.1.3 Structure.....110
11.1.4 Power Source 110
11.1.5 Normal Operating Conditions.....110
11.1.6 Alarm Output (Optional: LH6).....111
11.1.7 Low voltage Directive and EMC Directive 111
11.1.8 DI Function (Option: RE6).....111
11.1.9 Paper-empty Detection Function (Option: FL6).....111
11.2 Standard Specifications.....112
11.2.1 Measurement Range 112
11.2.2 Accuracy at the Computation 115
(1) Scaling.....115
(2) Square Root Computation 115
(3) Decade.....116
(4) Difference, Sum, and Average 116
11.2.3 Individual Specifications.....116
11.2.4 Standard Functions.....117
11.3 Standard Setting Functions 118
11.3.1 Standard Setting Functions.....118
11.4 Optional Functions 118
11.4.1 Remote Function of DI 118
11.4.2 Alarm Output Function 118
11.4.3 Communication Function 118

1. INTRODUCTION

1.1 Checking the Accessories

Upon delivery of this instrument, unpack and check its accessories and appearance.
If there are any missing accessories or damage to the appearance of the instrument, please contact our dealer where you purchased the instrument, or our sales representative.
The following accessories are included with the recorder.

1. Chart paper

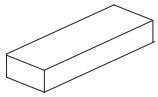

2. Ribbon cassette

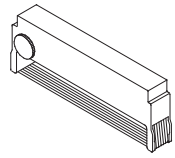

3. Mounting brackets

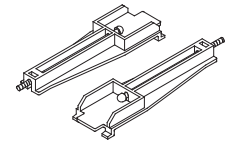

4. Instruction manual

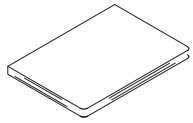

5. Packing

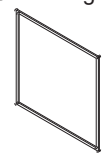

Fig. 1.1 Accessories

Table 1.1 List of Accessories

No.	Part Name	Type	Quantity	Remarks
1	Chart paper	H-10100	1	100 equal divisions
2	Ribbon Cassette	WPSR188A000001A	1	
3	Mounting bracket	H4A14175	2	Panel mounting bracket
4	Instruction manual	HR71E	1	This manual
5	Packing	H4H14900	1	For IP65

[Note]
The ribbon cassette has been set in the instrument before shipment.

1.2 Checking the Model Type and Specifications

A nameplate has been secured on the inside of the instrument. Remove the chart holder and make sure that the nameplate is put in the middle far side of the instrument.

Make sure that this instrument meets your requested specification, checking the following table.

Table 1.2 Model type

H R – 7 0 6, □□□			144 (W) x 144 (H) x 150 (D) mm
Measuring point	6		6 points
Options		C5	Communication function (RS-485)
		RE6	DI function
		FL6	Paper-empty detection function
		LH6	Alarm output function

1.3 Temporary Storage

Store the instrument in the following environment.

When installed within another machine, ensure that the operating environment conforms to the following conditions.

⚠ CAUTION

Storage in a poor environment may damage the appearance, functions, and service life of the instrument.

Storage Environment

- A place free from excess dust
- A place free from combustible, explosive, or corrosive gases (SO_2, H_2S, etc.)
- A place free from vibrations or shocks
- A place free from water or steam or high humidity (95 %RH max.)
- A place free from direct sunlight or high temperature (50℃ max.)
- A place free from an extremely low temperature (-20℃ min.)

1.4 Location ID tag

A location ID tag is kept on the inside of the transparent door. Enter location or other data as required.

⚠ CAUTION

Note that if a non-approved nameplate is attached, it may damage the door or mounting part.

2. CONSTRUCTION

2.1 Appearance

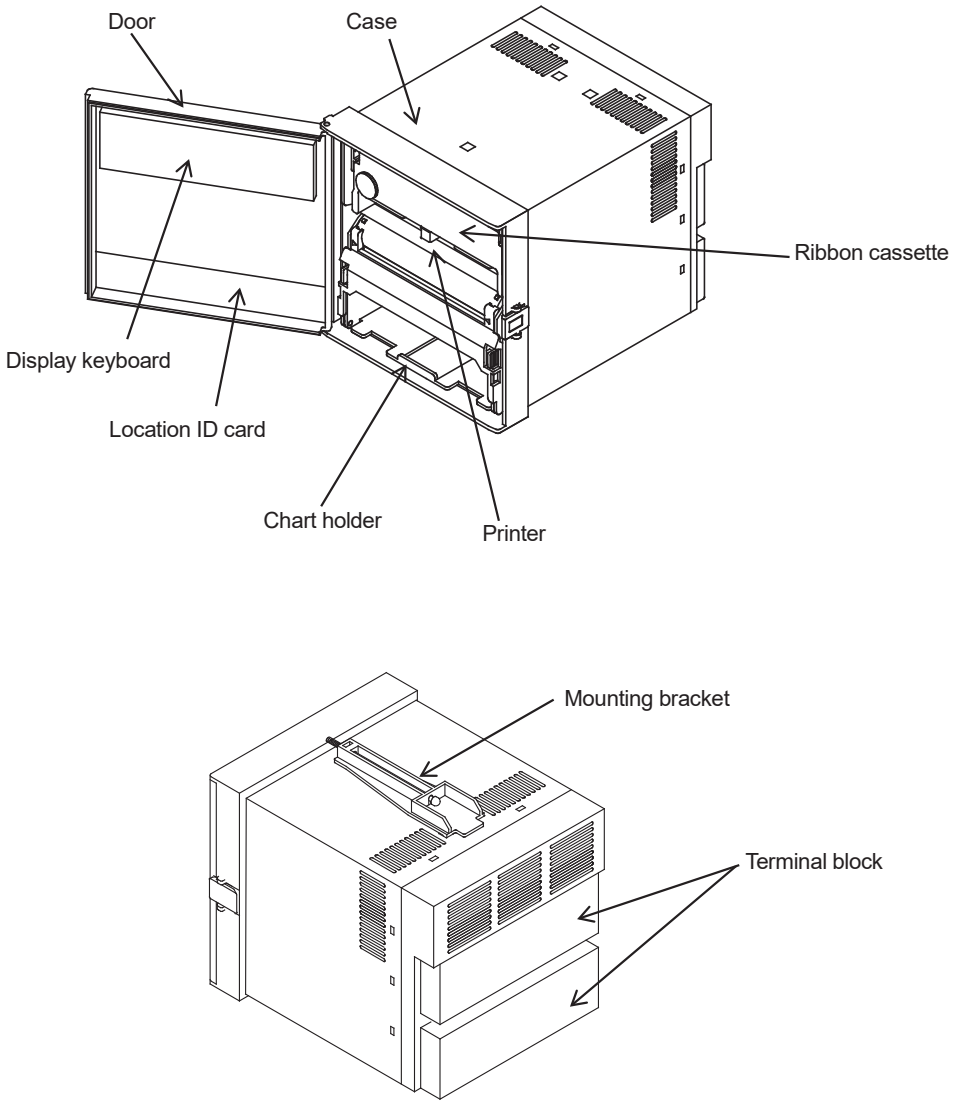

Fig. 2.1 Appearance

2.2 Display and Operation Keys

2.2.1 Display

The following describes the display. Since the channel numbers and data are indicated by a 7-segment LED, alphabets are symbolized to represent them.

For the LED display, see "Symbolized Alphabets for Display" at [Reference] below.

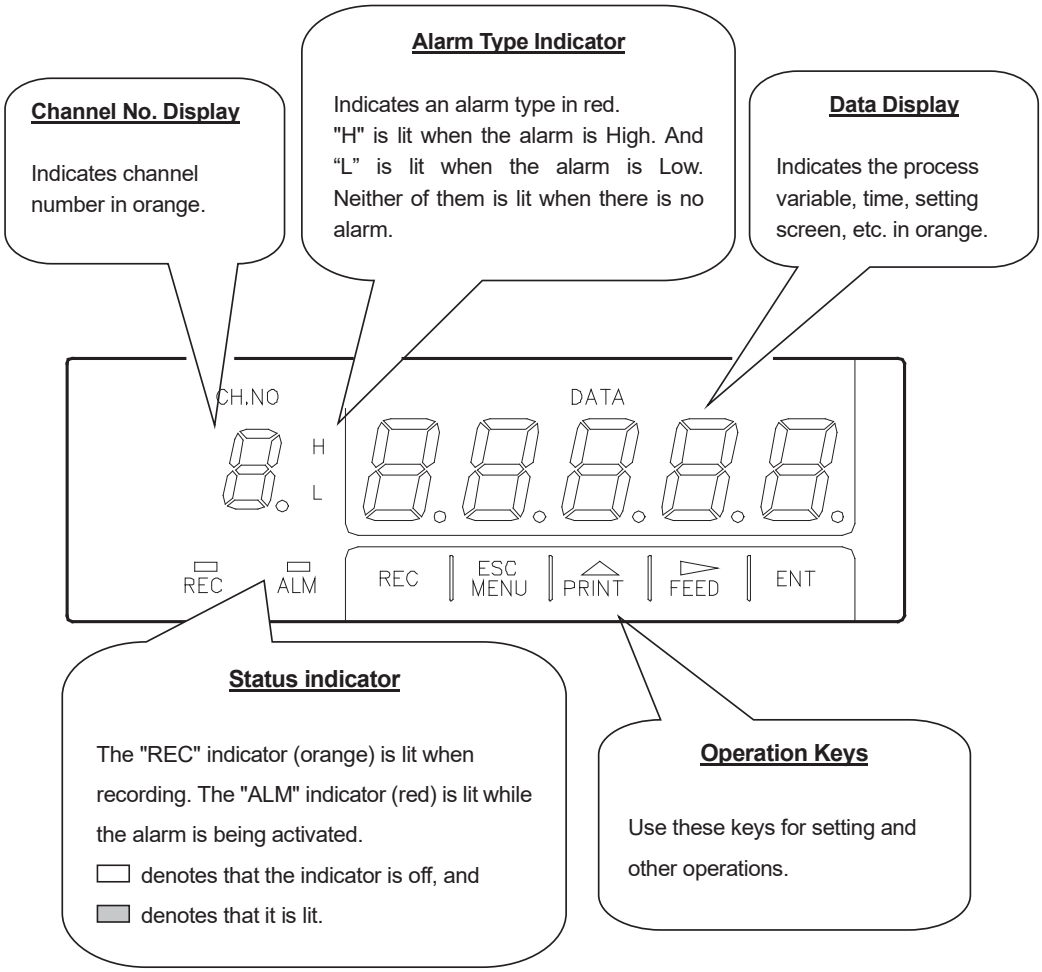

Fig. 2.2.1 Display

[Reference] Symbolized Alphabets for Display

Display	A	b	C	d	E	F	G	H	h	I	J	K	L	I
Alphabet	A	B	C	D	E	F	G	H	h	I	J	K	L	I
Display	n	n	o	P	q	r	S	t	U	U	y	11	y	Z
Alphabet	M	N	O	P	Q	R	S	T	U	V	W	X	Y	Z

2.2.2 Operation Keys

The following describes functions of each operation key.

The actual operation keys are described as shown below.

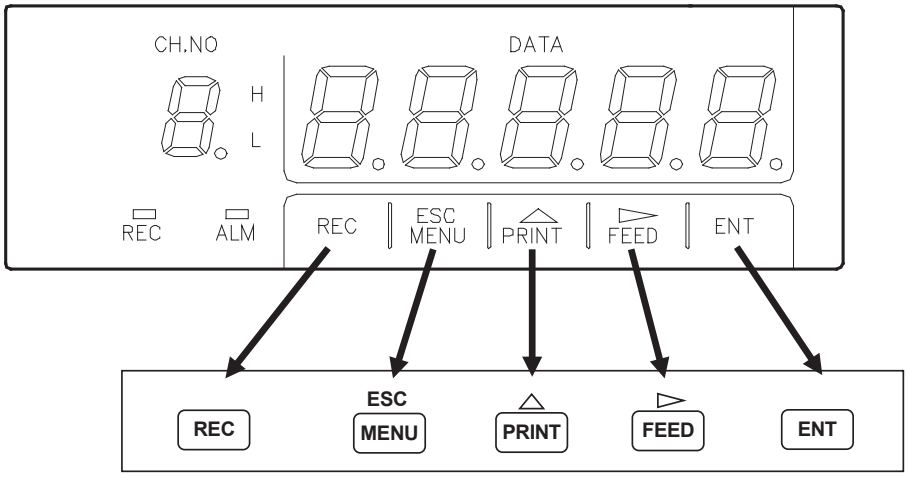

Fig. 2.2.2 Operation Keys in This Manual

Table 2.2.2 Names of Operation Keys and Their Functions

Key	Name	Function	
REC	"REC" key	Starts/stops recording. To stop, press the "REC" key for 3 seconds or longer. (The "REC" indicator goes off.) To start, press the "REC" key. (The "REC" indicator lights.)	
MENU	"MENU" key	MENU function	Selects engineering list printing and changes the mode to the setting mode.
	"ESC" key	ESC function	While selecting a function, exits that menu without finishing.
△ PRINT	"PRINT" key	PRINTING function	Used to perform manual printing or list printing.
	" △ " key	△ function	Used to select a setting parameter (numeral or built-in command) (ascending direction).
▷ FEED	"FEED" key	FEED function	The chart paper is fed while the key is pressed, and stopped when released.
	"▷" key	▷ function	Used to shift a digit in setting a numeral.
ENT	"ENT" key	Used to register a setting parameter (numeral or built-in command) after selecting it, or used to execute a function. Pressing this key executes the setting.	

3.1 External Dimensions and Panel Cutout

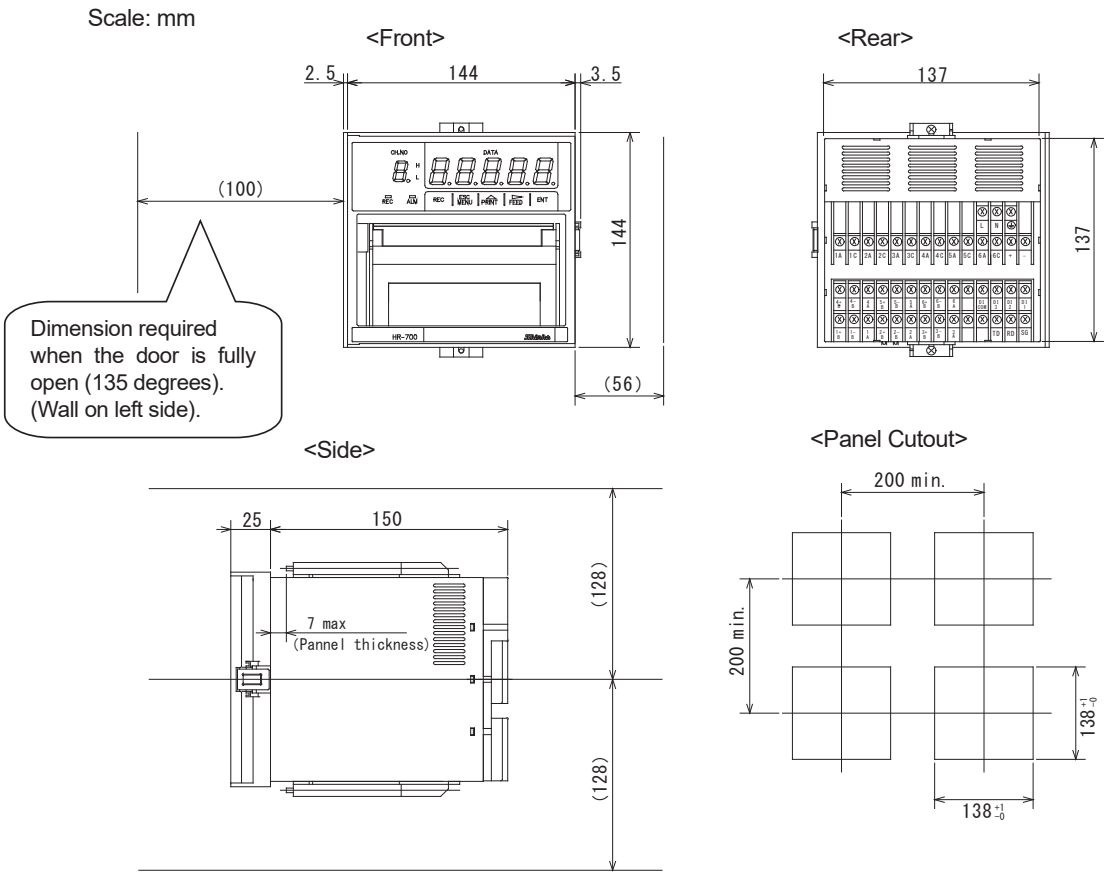

Fig. 3.1 External Dimensions and Panel Cutout

⚠ CAUTION

For the maintenance and safety of the instrument, the space/size indicated in the brackets ( ) is the minimum secure spacing.

3.2 Panel Mounting

⚠ WARNING

Do not install this instrument in a place exposed to combustible, explosive, or corrosive gas (SO_2, H_2S, etc.).

⚠ CAUTION

Install the instrument only in the following conditions.

- A place without rapid humidity change.
- A place of normal temperature (around 25℃).
- A place exposed to as few mechanical vibrations as possible.
- A place with as little dust as possible.
- A place affected by electromagnetic fields as little as possible.
- A place not directly exposed to high radiant heat.
- A place of altitude below 2000 m.
- Humidity has an effect on the chart paper and ink. Use the instrument in a humidity range of 20 to 80 %RH (60 %RH is the optimum).
- This instrument needs to be installed indoors.

Panel Mounting

- A steel plate not thinner than 1.2 mm is recommended as a mounting panel.
- The maximum thickness of the mounting panel is 7 mm.

Inclination

- Install the instrument horizontally.
- The instrument should be installed so that its inclination should be 0° at the front and within 30° at the rear.

3.2.1 Procedure for Panel Mounting

1) Assemble the mounting bracket, referring to Fig.3.2.1-1.
2) Insert this instrument through the front of the panel.
3) Hook the claws of the mounting bracket at the square holes on the top and bottom surfaces of the case.
4) Tighten the screw of the mounting bracket with a screwdriver to attach it to the panel. When the mounting unit does not move back and forth any more, tighten the screw by 180°.

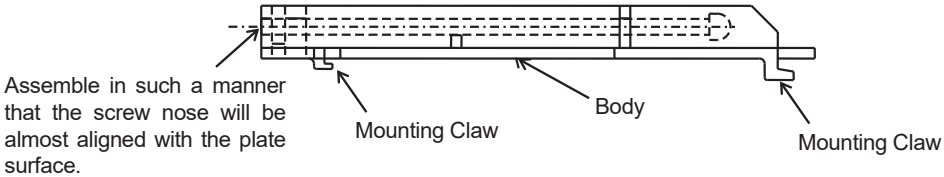

Fig. 3.2.1-1 Mounting Bracket

[Note]

If it is tightened with excessive force, the case may be distorted and the mounting bracket may be damaged. An adequate tightening torque is 0.2 to 0.3 N·m (2 to 3 kgf·cm).

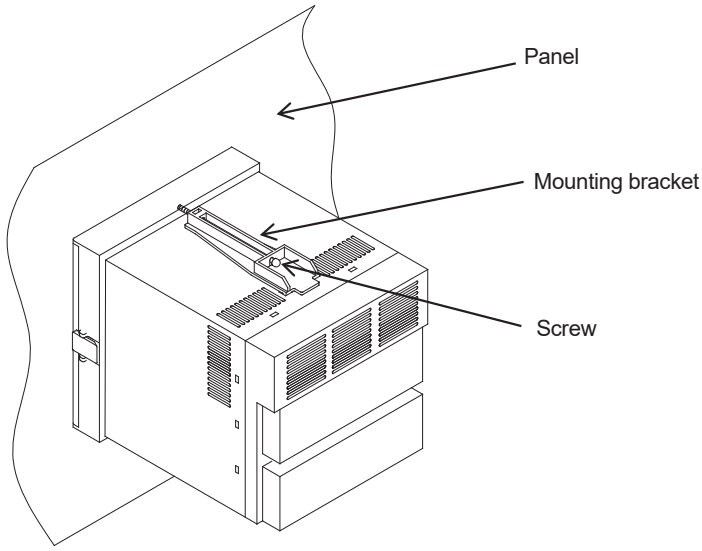

Fig. 3.2.1-2 Panel Mounting

3.2.2 Panel Mounting in Compliance with the IP65

Prior to mounting the instrument to the panel, attach packing to the position shown in the figure. The rest of the procedure is the same.

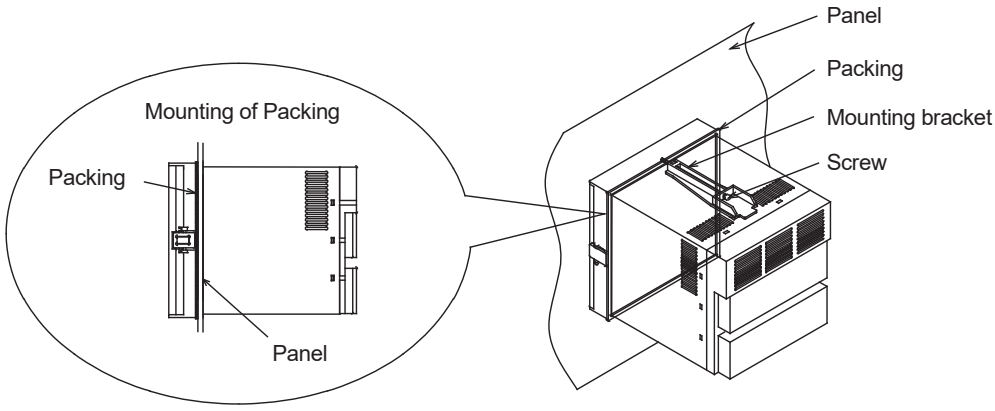

Fig. 3.2.2 Panel Mounting (in compliance with the IP65)

4.1 Terminal Arrangement and Power Wiring

4.1.1 Terminal Arrangement

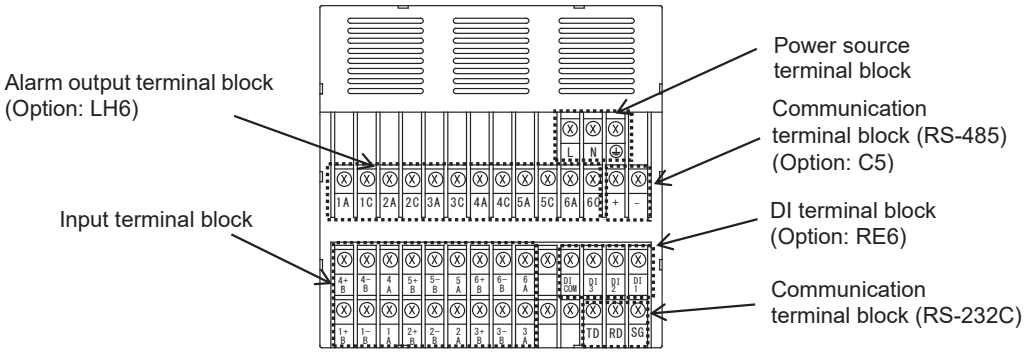

Fig. 4.1.1 Terminal arrangement (Rear view)

4.1.2 Power Wiring

WARNING

(1) In order to prevent an electric shock, be sure to provide protective grounding prior to supplying power to the instrument.

(2) Do not cut the protective grounding conductor or disconnect protective grounding.

(3) Make sure that the supply voltage for the instrument conforms to the voltage of the supply source.

(4) Attach a transparent protective cover prior to switching on power to the instrument.

(5) Any disruption to the protective conductor inside or outside the instrument, or disconnection of the protective grounding terminal, is likely to make the instrument dangerous under conditions that are other than normal. Intentional disruption is prohibited.

⚠ CAUTION

(1) As an electric wire for the power source, use a 600 V vinyl insulated wire (IEC60227-3) or its equivalent or above.

(2) Attach a ring-type solderless terminal with an insulation sleeve (for M3.5) to the end of the electric wire.

(3) Connect a protective grounding (resistance: 100 Ω or lower, minimum diameter of a grounding conductor: 1.6 mm) to the protective grounding terminal.

(4) If another instrument shares the protective grounding conductor, there may be interference caused by noise coming from the grounding conductor. Do not share the grounding conductor with other instruments.

(5) In order to comply with the requirements of safety standard EN61010-1, the recorder should have one of the following as a disconnecting device, fitted within easy reach of the operator, and labeled as the disconnecting device.

a) A switch or circuit breaker which complies with the requirements of IEC60947-1 and IEC60947-3.

b) A separable coupler which can be disconnected without the use of a tool.

c) A separable plug, without a locking device, to plug in a socket outlet in the building.

(6) This product has been designed to conform to EN61010-1, installation CategoryⅡ and pollution degree 2.

(7) The main power supply should be used within a fluctuation range of ±10% of rated voltage.

(8) Transient current might flow to the main power supply when the power supply is turned on.

4.1.3 Wiring Procedure

⚠ CAUTION

To remove the transparent protective cover, release the left and right (both sides) hooks simultaneously. If they are released one after the other, the cover may be damaged.

(1) Put your fingers on the left and right (both sides) hooks of the transparent protective cover on the power source terminal block. Pushing them in, pull the cover toward you.

(2) Connect the power source electric wire, referring to Fig. 4.1.3. Connect the protective grounding to the ⏚ terminal. Connect the non-grounding side of the power source to "L" terminal. Connect the grounding side to the "N" terminal.

(3) Attach the transparent protective cover.

(4) Make sure that protective grounding is properly done.

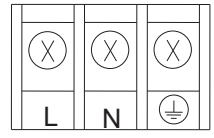

Power supply:
Rated power supply: 100 to 240 V AC
Allowable voltage fluctuation: 85 264 V AC
Power frequency: 50/60 Hz

Fig. 4.1.3 Wiring of Power supply

4.2 Input Wiring

⚠ CAUTION

(1) Precautions for the input electric wire

- Make sure that noise is eliminated in input wiring. For input wiring, a shielded wire or twisted wire should be used to eliminate noise.
- In the case of thermocouple input, connect a thermocouple wire directly or use a compensating lead wire. A shielded input line should be used.
- In the case of RTD (resistance temperature detector) input, dispersion of 3-wire line resistance should be lower than the value mentioned below. A shielded input line should be used.

  For Pt100, JPt100; 50 mΩ max.
- When it is likely to be affected by induction noise, particularly when wiring near a high-frequency power source, a shielded twisted wire should be used.
- Attach a ring-type solderless terminal with an insulated sleeve (for M3.5) to the end of the electric wire.

(2) Precautions for wiring

- The wiring between the instrument and measurement point should be kept away from the power circuit (25 V or higher of either power circuit or DO circuit).
- Short-circuit unused input terminals. (Short-circuit between "+" and "-" in the case of mV, V, or thermocouple input, and short-circuit among A, B and B of RTD input.)
- Be sure to ground the connecting wire shield.

4.2.1 Wiring Procedure

⚠ CAUTION

To remove the transparent protective cover, release the left and right (both sides) hooks simultaneously. If they are released one after the other, the cover may be damaged.

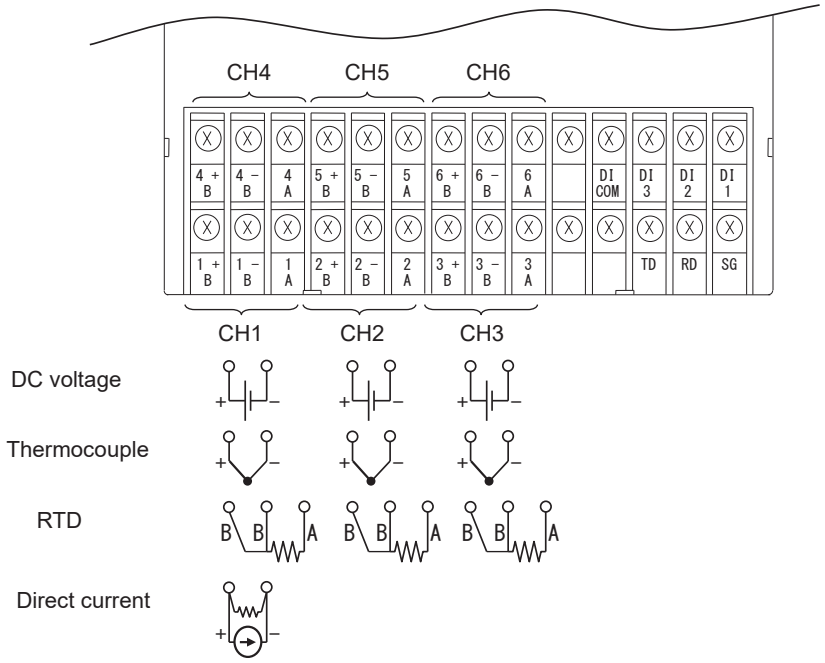

Fig. 4.2.1-1 Input Wiring for Each Channel

(1) Put your fingers on the left and right hooks of the transparent protective cover on the input terminal block. Pushing them in, pull the cover toward you.

(2) Wire the input lines, referring to Fig. 4.2.1-1, Fig. 4.2.1-2 and Fig. 4.2.1-3. (p.19)

(3) Attach transparent protective covers.

mV, V inputs

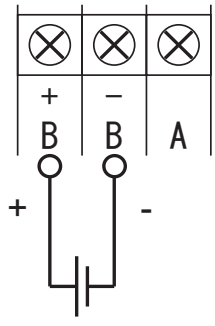

Thermocouple input

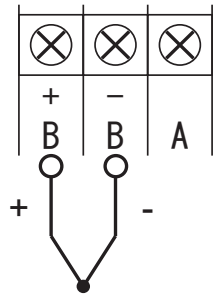

Fig. 4.2.1-2 Input Wiring (mV, V, Thermocouple inputs)

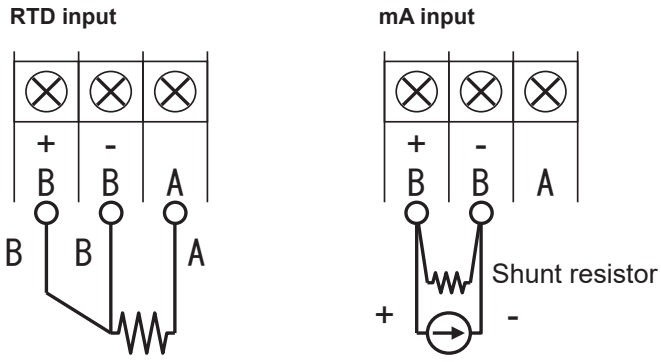

Fig. 4.2.1-3 Input Wiring (RTD, mA inputs)

⚠ CAUTION

(1) Attach a shunt resistor to the input terminal block of the instrument.

(2) A shunt resistor affects input accuracy. Use the following resistor.

Resistance: 250 Ω Rated power: 1/4 W Tolerance: ±0.1% max.

Temperature coefficient: ±50 ppm max.

4.3 DI Function/Alarm Output Wiring (Optional)

⚠ WARNING

(1) Be sure to wire after turning power OFF.
(2) When the power source has been connected to the Alarm output, turn off that power source.
(3) When a hazardous voltage is supplied to the alarm terminal:
a) Never touch terminals. b) Attach covers to terminals. c) Wires should be double shielded.
d) Use ring-type solderless terminal connectors with an insulation sleeve.

⚠ CAUTION

Precautions for Wiring the DI function

(1) DI function input has a built-in drive power source. Do not apply an external voltage to a DI function input terminal.
(2) A DI function input contact capacity should be a withstanding voltage of 50 V DC, 16 mA or more, ON resistance of 20 Ω max. (Wiring resistance included).
(3) Do not use unused terminals as relay terminals.

Precautions for Wiring the Alarm Output

(1) An alarm output contact capacity is as follows.

250 V AC: 3 A max. (Resistive load)
30 V DC: 3 A max. (Resistive load)
125 V DC: 0.5 A max. (Resistive load)
0.1 A max. L/R= 7 ms max. (Inductive load)

(2) Attach an anti-surge protective circuit (surge absorbers, etc.) to an output terminal, when required.
(3) Attach a round solderless terminal with an insulation sleeve (for M3.5) to the end of an electric wire.
(4) Keep alarm output wiring away from the input wiring.
(5) Do not use unused terminals as relay terminals.

4.3.1 DI function/Alarm Output Wiring Example

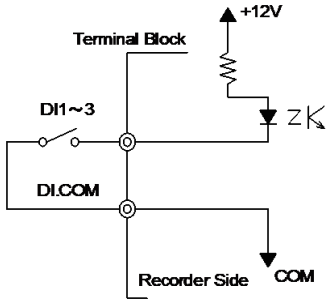

Fig. 4.3.1-1 DI Function Wiring Example

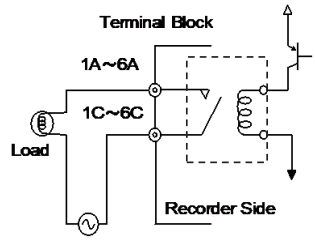

Fig. 4.3.1-2 Alarm Output Wiring Example

⚠ CAUTION

The DI function (optional) consists of 3 Digital inputs.
The alarm output consists of 6-Relay output (Normally open).

4.3.2 Alarm Output Wiring Procedure

Wire the Alarm output (option: LH6), referring to Fig.4.3.2.

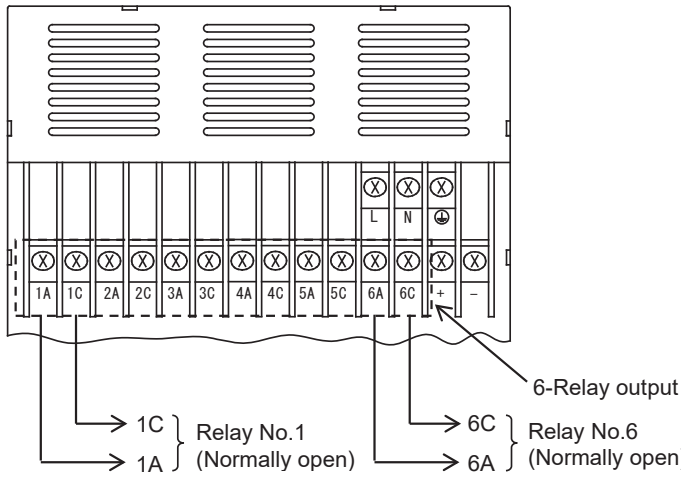

Fig. 4.3.2 Alarm Output Wiring

> ⚠ **CAUTION**
>
> Relay No.1 is a common output for Alarm output and Paper-empty detection sensor (optional) (OR output).

4.3.3 DI Function Wiring Procedure

Wire the DI function (option: RE6), referring to Fig.4.3.3.

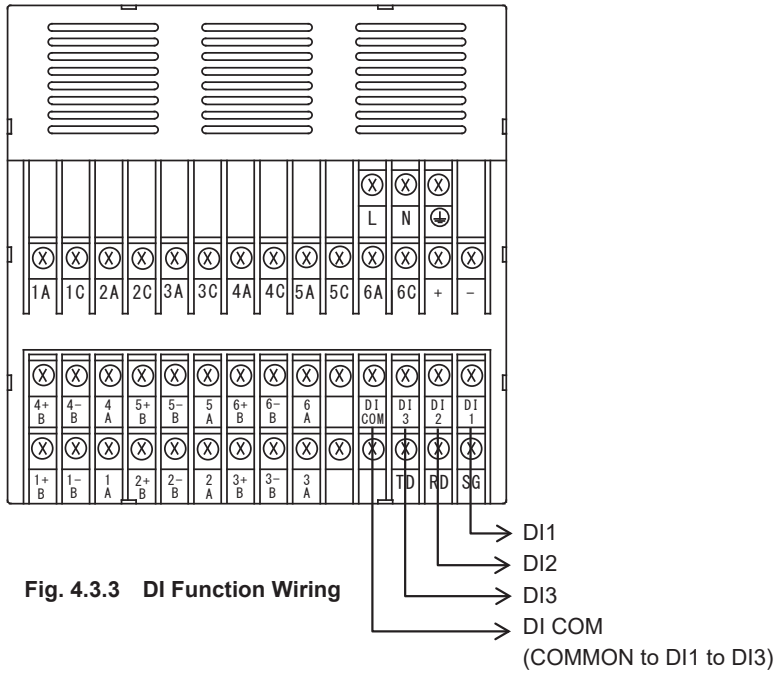

Fig. 4.3.3 DI Function Wiring

4.4 Communication Wiring

⚠ CAUTION

Precautions for the communication wiring

(1) Ensure that the communication wiring is unaffected by noise. For communication wiring, a shielded wire effective against noise should be used.

(2) When it is likely to be affected by induction noise, particularly when wiring near a high frequency power source, a shielded twisted wire should be used.

(3) Attach a ring-type solderless terminal with an insulation sleeve (for M3.5) to the end of the electric wire.

(4) Be sure to ground the shield of a connecting wire.

4.4.1 RS-232C Wiring

Wire RS-232C, referring to Fig.4.4.1.

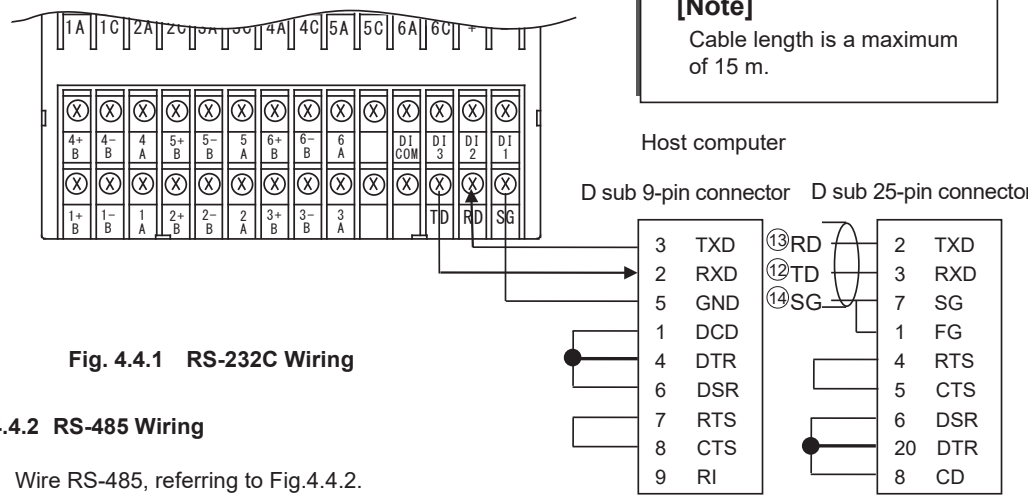

Fig. 4.4.1 RS-232C Wiring

4.4.2 RS-485 Wiring

Wire RS-485, referring to Fig.4.4.2.

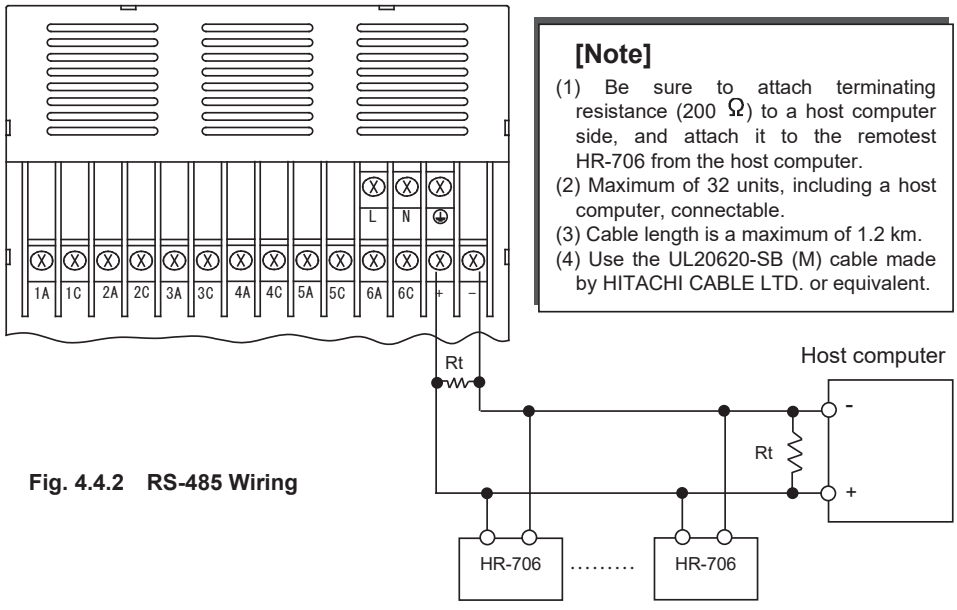

Fig. 4.4.2 RS-485 Wiring

5. PREPARATIONS FOR OPERATION

5.1 Setting the Chart Paper

⚠ CAUTION

Our original chart paper should be used to ensure proper recording.
If the chart holder is taken out and the recording operation is activated, the ink ribbon may be damaged. To replace the chart paper, be sure to press the “REC” key to stop recording.

(1) Press the “REC” key for 3 seconds or longer.
To stop recording, press the “REC” key for 3 seconds or longer with the power turned on.

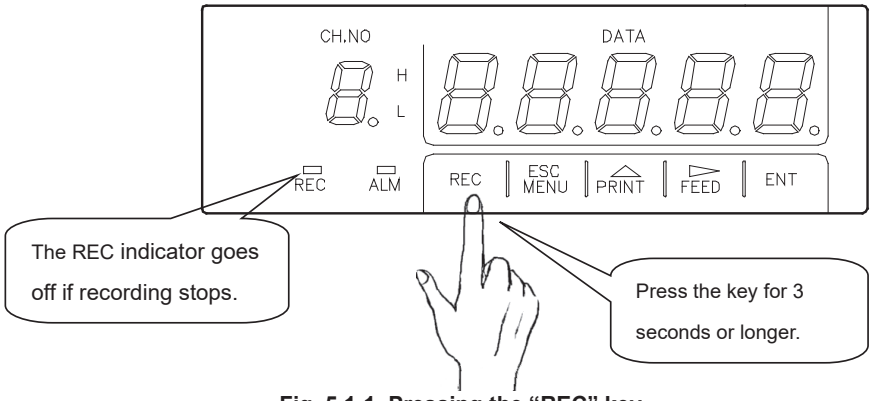

Fig. 5.1-1 Pressing the “REC” key

(2) Open the Door.

⚠ WARNING

To avoid injury of fingers by getting caught, be careful when opening/closing the door.

⚠ CAUTION

Maximum angle of the fully opened door is 135 degrees. Do not open the door any further, as the hinge will break.

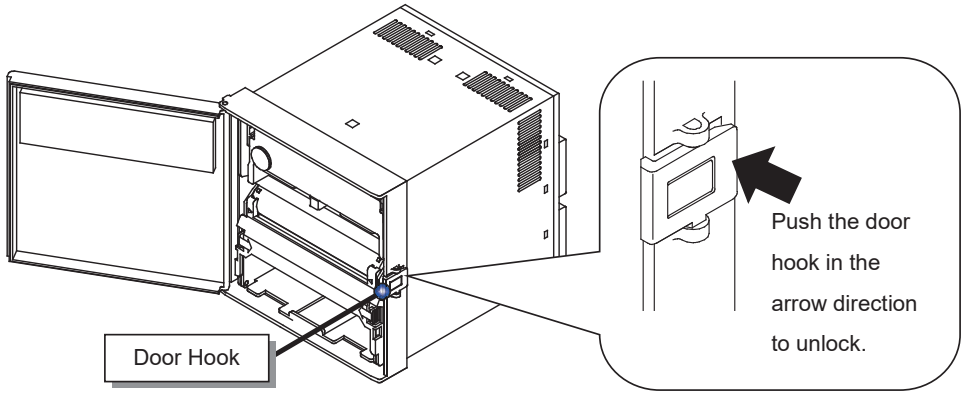

Fig. 5.1-2 Opening the Door

(3) Pull out the Chart Holder.

Put your fingers onto the levers at both sides of the chart holder and pull it out.

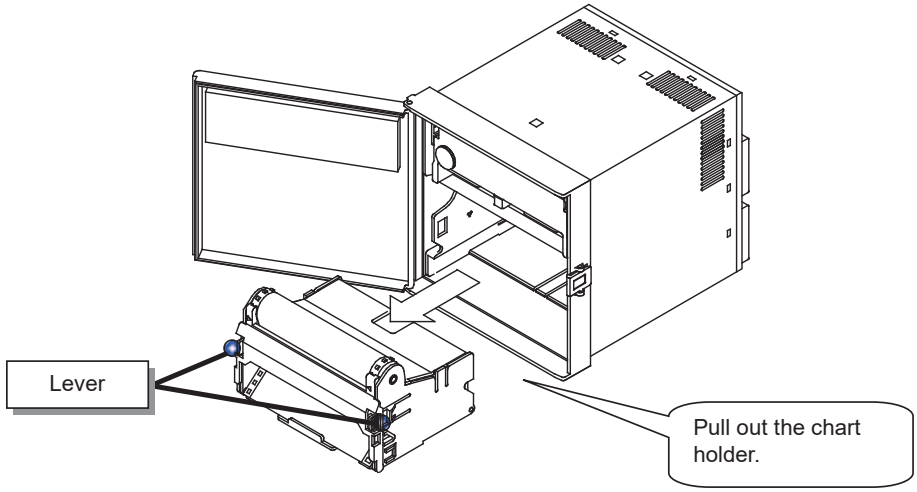

Fig. 5.1-3 Pulling out the Chart Holder

(4) Open the Chart Cover and Chart Guide.

Open the chart guide and the chart cover outward.

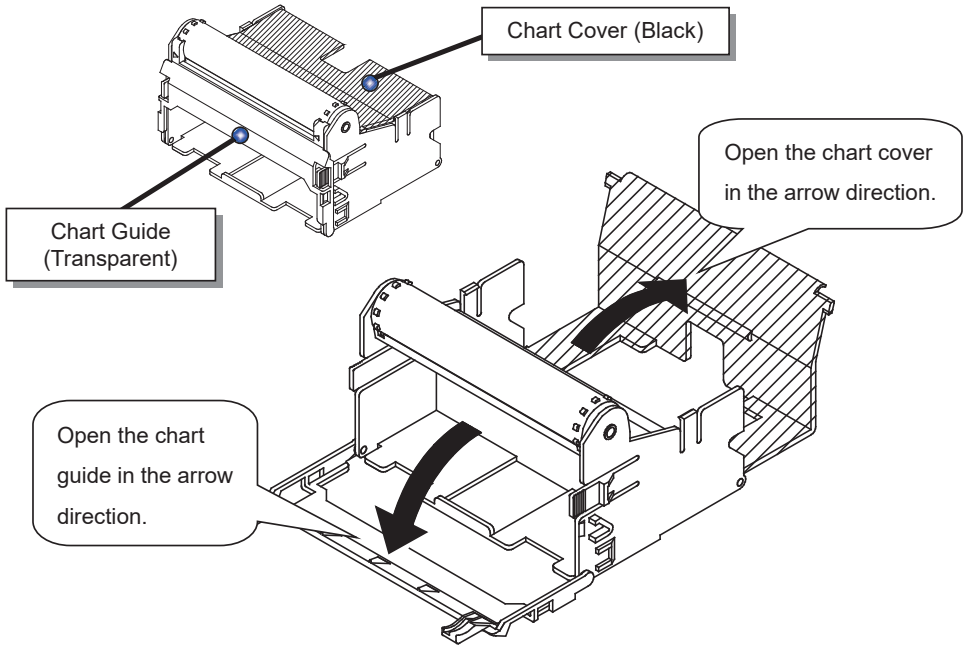

Fig. 5.1-4 Opening the Chart Cover and Chart Guide

(5) Loosen the chart paper.

The chart paper may not be properly fed, if stuck. Be sure to loosen the paper.

Fig. 5.1-5 Loosening the Chart Paper

(6) Set the Chart Paper into the Storage Chamber.

Unfold 2 sections of chart paper. Holding the printing surface upward, set it in the storage chamber.

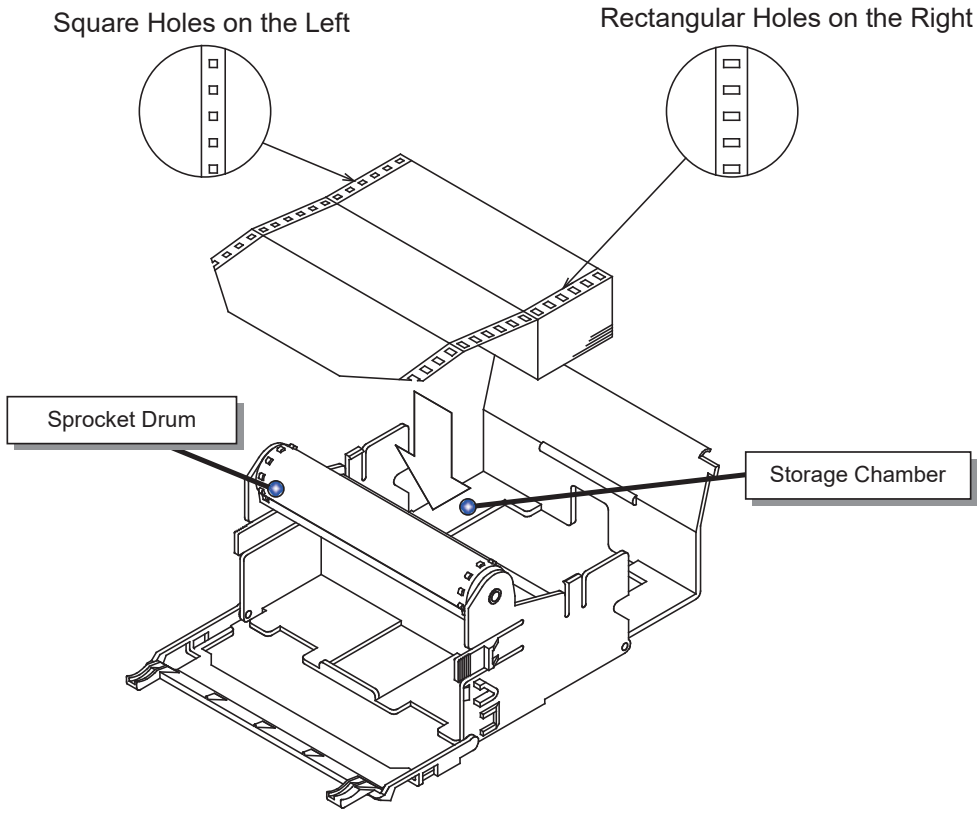

Fig. 5.1-6 Setting the Chart Paper

(7) Align the Chart Paper with the Sprocket Drum.

Align the holes in the chart paper with the sprocket drum teeth. Set the chart paper along with the sprocket drum. Put the first ply of the chart paper into the chart receiver.

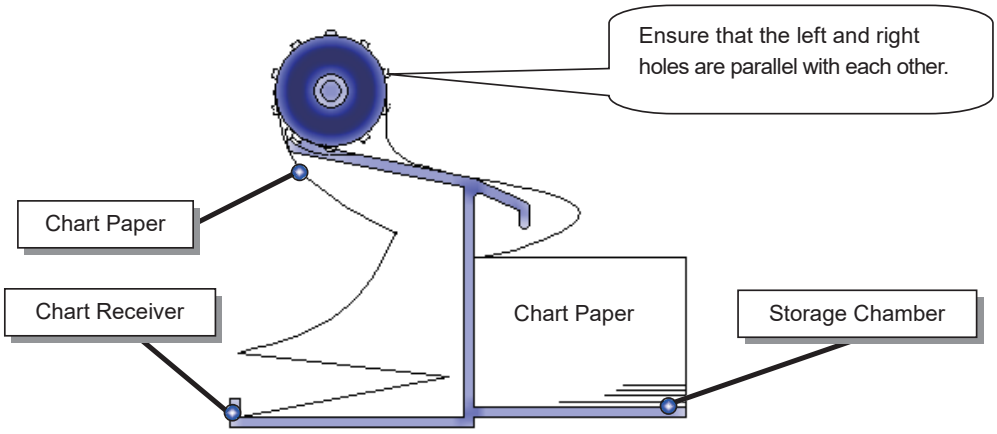

Fig. 5.1-7 Aligning the Chart Paper with the Sprocket Drum (Chart Holder Sectional View)

(8) Close the Chart Cover and Chart Guide.

Close the chart cover and the chart guide in the arrow directions.

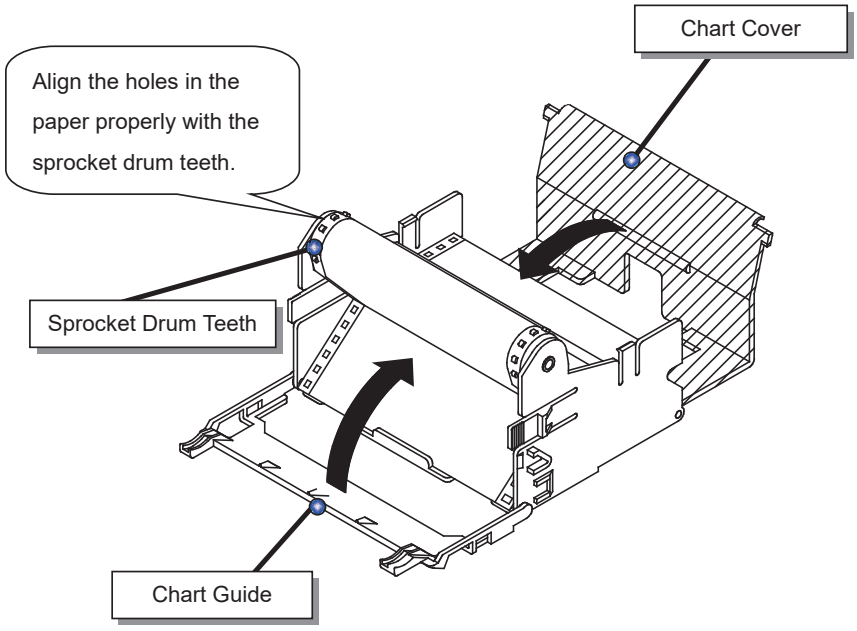

Fig. 5.1-8 Closing the Chart Cover and Chart Guide

(9) Turn the Sprocket Drum Gear.

Check paper feed using your hand. Turn the sprocket drum gear to feed out the chart paper.

(4 sections of chart paper should be fed out.)

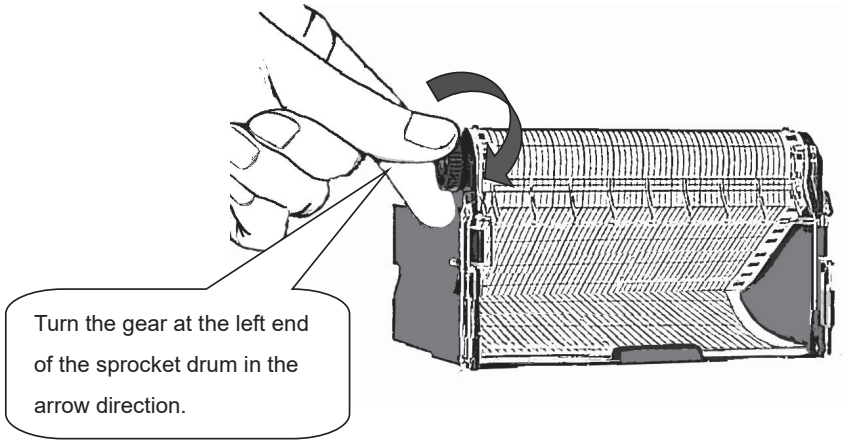

Fig. 5.1-9 Checking Paper Feed

(10) Put the Chart Holder back.

Insert the chart holder horizontally into the case until it is locked.

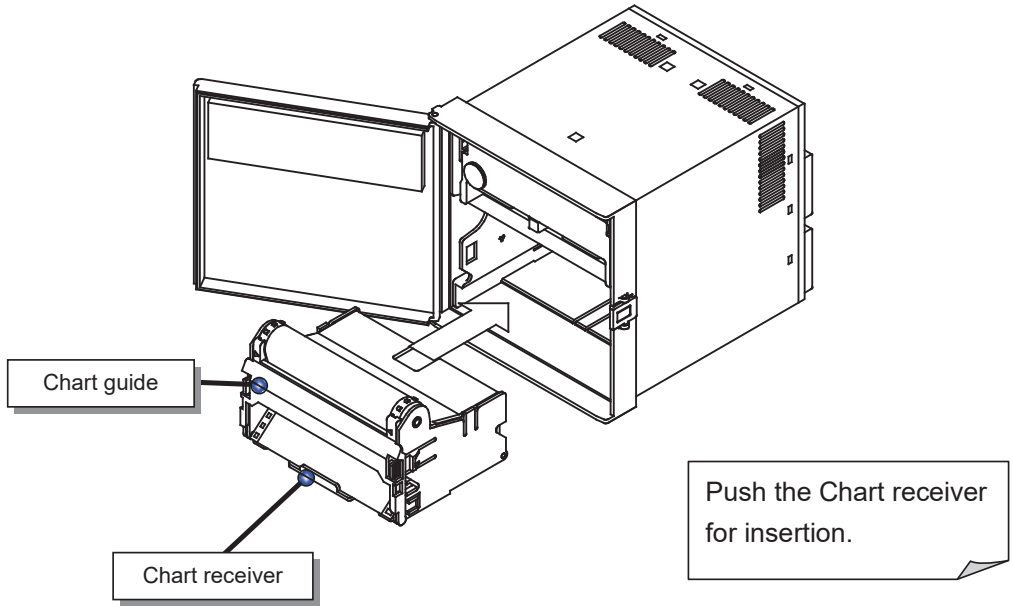

Fig. 5.1-10 Putting Back the Chart Holder

(11) Close the Door.

⚠ Caution

Be careful when opening the door more than 90 degrees. Also make sure that the display cable does not get caught.

Close the door and check that it is locked.

(12) Press the “FEED” key to check Paper Feed.

Press the “FEED” key on the display keyboard to feed the chart paper.

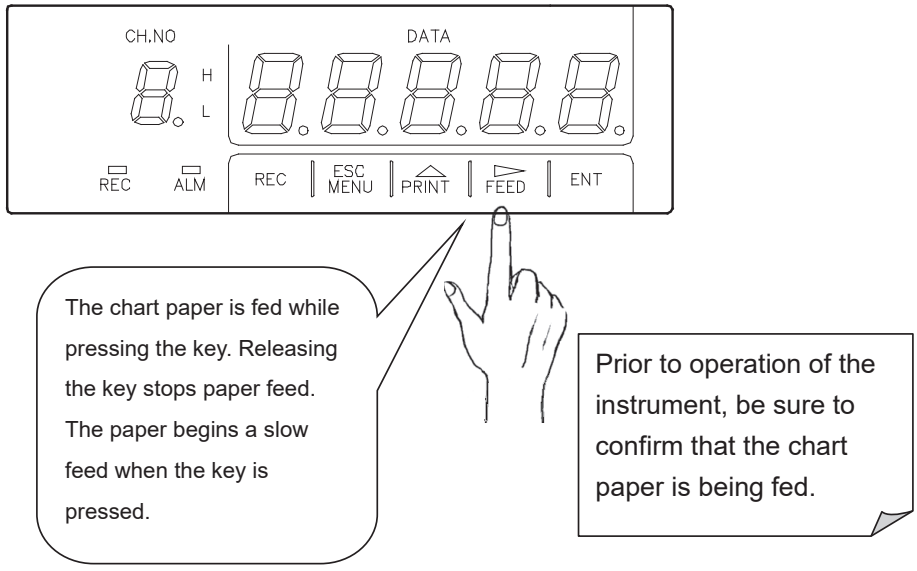

Fig. 5.1-11 Pressing the “FEED” key

(13) Press the “REC” Key to restart Operation.

5.2 Setting the Ribbon Cassette

⚠ CAUTION

If recording operation is activated while the chart holder is removed, the ink ribbon may be damaged. To replace the ribbon cassette, be sure to press the “REC” key to stop recording. If the ribbon cassette is not set properly, the recording color may change or the ribbon may be damaged.

(1) Press the “REC” key for 3 seconds or longer.

Recording stops. With the power turned on, press the “REC” key for 3 seconds or longer.

Once recording stops, the REC indicator goes off.(See Fig. 5.1-1 on page 23.)

(2) Open the Door.

Push the door hook to unlock the door. Pull the door to open it. (See Fig.5.1-2 on page 23.)

⚠ WARNING

To avoid injury of fingers by getting caught, be careful when opening/closing the door.

⚠ CAUTION

Maximum angle of the fully opened door is 135 degrees. Do not open the door any further, as the hinge will break.

(3) Pull out the Ribbon Cassette.

Grab the left side of the ribbon cassette. Holding down the ribbon holder, pull the ribbon cassette toward you.

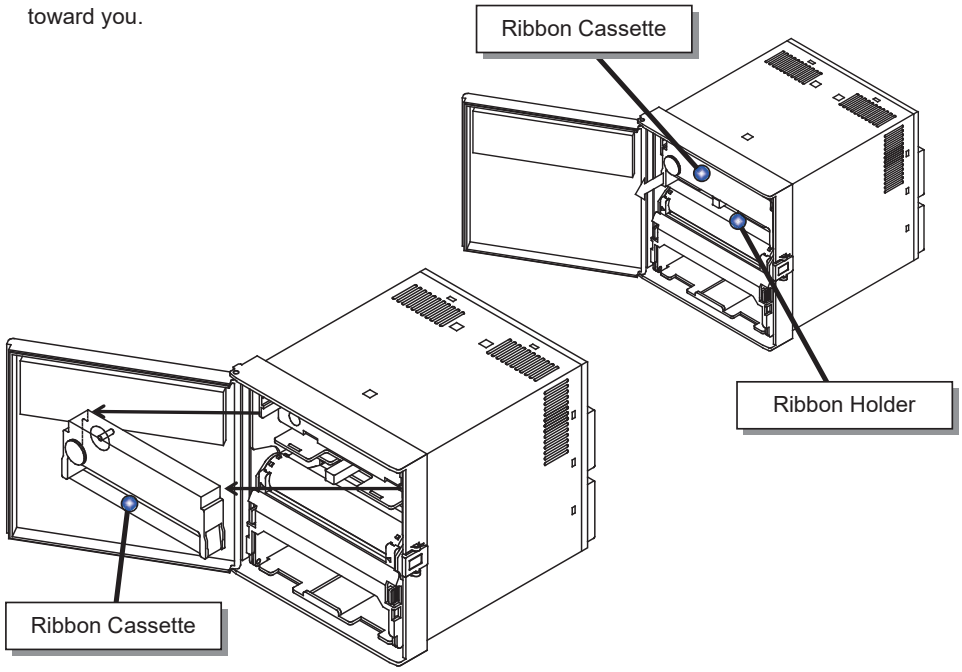

Fig. 5.2-1 Taking Out the Ribbon Cassette

(4) Tighten the Ink Ribbon.

Set the new ink ribbon. Turn the knob in the arrow direction to tighten the ink ribbon.

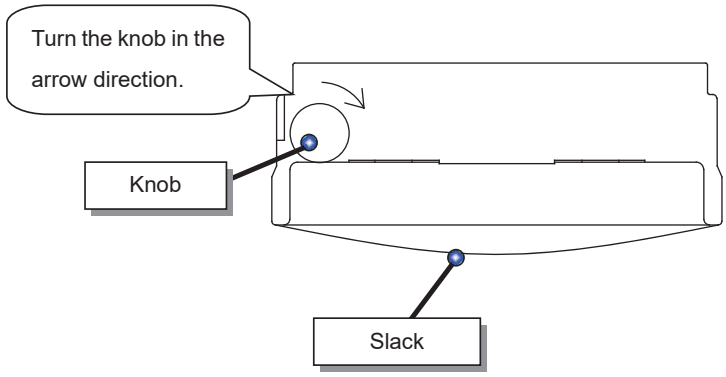

Fig. 5.2-2 Tightening the Ink Ribbon

(5) Set the Ribbon Cassette.

Push the ribbon cassette into the ribbon holder until the latch clicks.
When the ribbon feeding shaft does not easily fit in, turn the gear in the direction of an arrow to adjust the position. When this is done, push the ribbon cassette until the latch clicks.

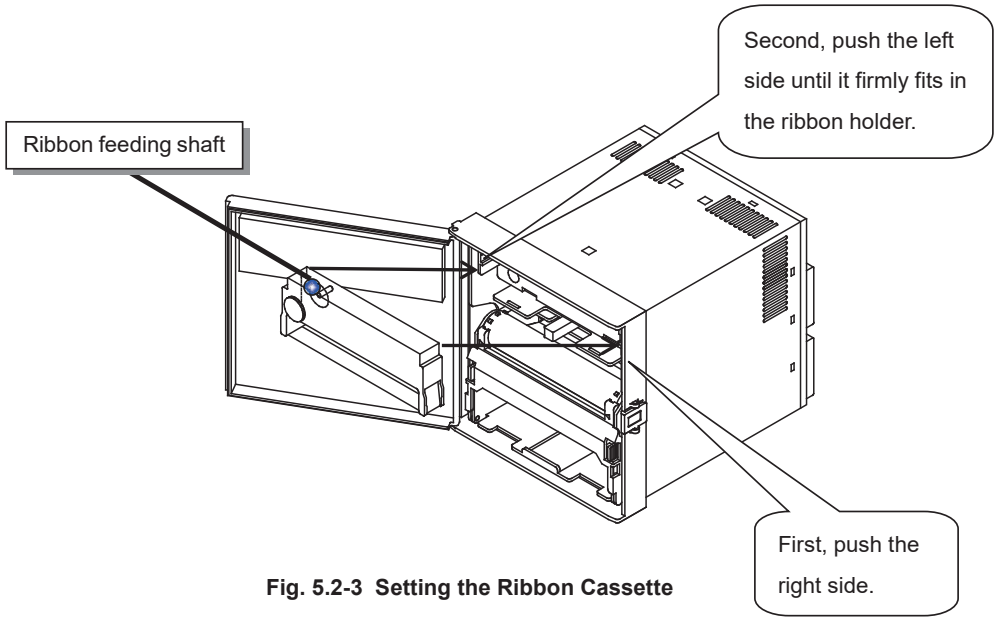

Fig. 5.2-3 Setting the Ribbon Cassette

(6) Close the Door.

> **⚠ Caution**
>
> Be careful when opening the door more than 90 degrees. Also make sure that the display cable does not get caught.

(7) Press the “REC” key to restart Operation.

6.1 Operation

WARNING

Prior to switching the power on, make sure that the supply voltage meets the specifications for the instrument, and the instrument is properly grounded.

CAUTION

(1) This recorder has no power switch.
(2) Prior to switching the power on, make sure that the chart paper is set in the chart holder.
If the printer is activated with no chart paper set, the sprocket drum (cylindrical part) of the chart holder may be damaged.

WARNING

When calibrating data, connect the equipment according to Section 9.5 of the instruction manual. Data calibration must be performed correctly.
Operators possessing knowledge of electricity and control related matters should perform the calibration after careful reading of Sections 7.2 and 9.5 of the instruction manual.
(Shinko Technos Co., Ltd. is not liable for damages incurred if calibration is performed other than prescribed in the instruction manual.)

Once the power is turned on, the display on the front of the door lights. The instrument will be ready to run (user mode) in about 5 seconds, including the initial screen. If the REC indicator is unlit, press the "REC" key to start recording operation.

6.1.1 Status after Initial Screen

(1) Display: The "REC" indicator retains its status prior to power-off.
(2) Printout data: All printing data and analog recording data are cleared after the power has been switched off.
(3) Alarm and Diagnosis: Alarm indications and output information are not recoverable after the power has been switched off.
(4) Data and Channel number are displayed as the following Fig. 6.1.1.

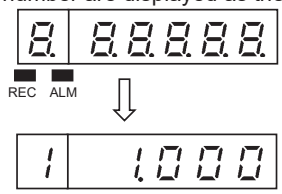

Returns to the mode before power-OFF.

Fig. 6.1.1 Screen at Power-on

[Note]
(1) If electric power failure occurs, the initialization is performed after power recovery.
The recorder reverts to the initial status above.
(2) The printout data is eliminated in initialization. Printout operation does not continue after power recovery when the power is turned off during printout.
(3) When the power is turned on, the display indicates "0" while reading data in Fig. 6.1.1.
The number of indicated digits differs depending on the setting.

6.2 Recording

⚠ CAUTION

(1) The instrument checks zero point for every recording. If the printer block is manually moved during recording, the recording position may be dislocated.

(2) In order to protect the chart paper, dot printing is not performed when the distance between the previous dot printing position and the current one for an identical channel is less than 0.4 mm in the chart paper feed direction or less than 0.5 mm in the scale direction.

6.2.1 Recording Colors

Table 6.2.1 lists the recording colors for each channel in analog recording.

The recording color can be selected from 6 colors for every channel.

Table 6.2.1 Recording Colors (standard)

Channel No.	Color
1	Purple
2	Red
3	Green
4	Blue
5	Brown
6	Black

6.3 How to Record

6.3.1 Starting/Stopping Recording

To start/stop recording, press the “REC” key.

To stop, press the “REC” key for 3 seconds or longer.

The “REC” indicator goes off when recording stops.

[Note]

(1) When the power is turned on, the recorder continues from the state in which it was turned off.

(2) When controlling recording start/stop through Digital Input (DI function, option: RE6), recording start/stop cannot be switched by the “REC” key.

6.3.2 Feeding the Chart Paper

The chart paper is fed while the “FEED” key is pressed, and stops when released.

6.3.3 Printing Sample

Logging printing, Alarm printing

Recording Start/Stop printing examples

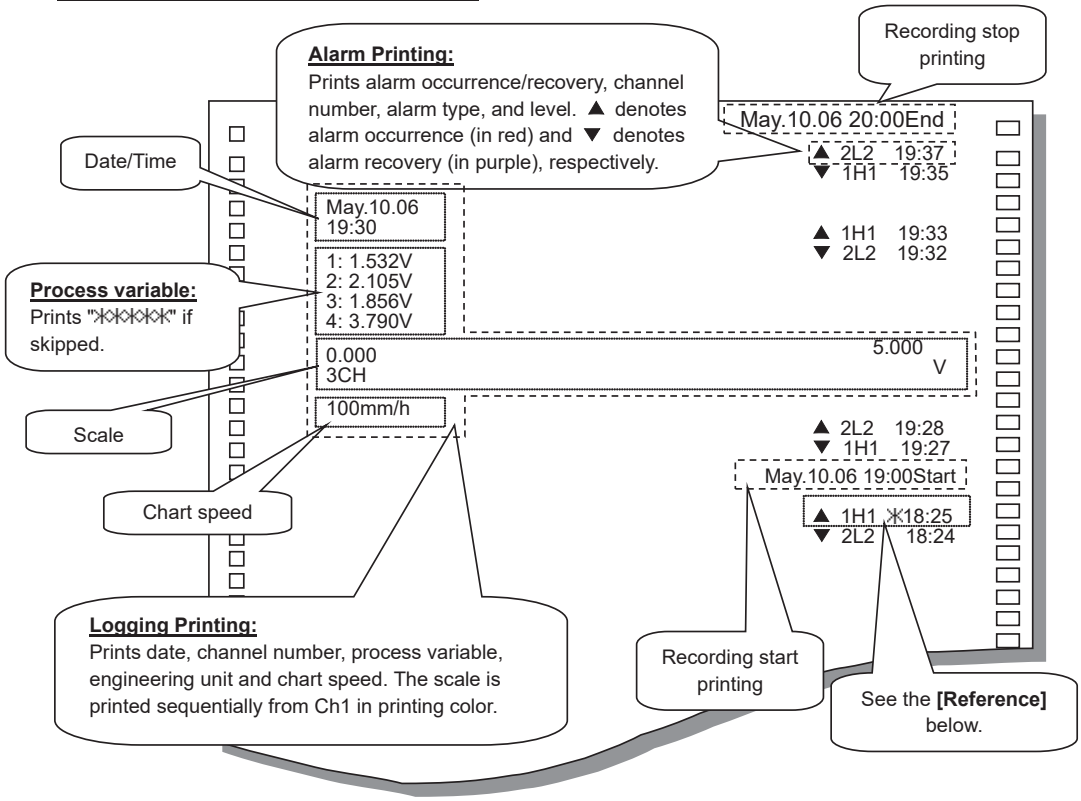

Fig. 6.3.3 Printing Sample

[Reference]

When other printing is active with current job, Alarm printing, Comment printing, Date-and-Time printing and Recording Start/Stop printing will queue.

HR-706 can store up to six items of Alarm Occurrence/Recovery printing and up to five items of Comment/Date-and-Time printing.

If printing commands exceed those numbers, HR-706 prints "✳" at the end of the last printing.

This mark means that any following items after the item with a "✳" mark could not be printed.

For priority of respective printings, see "Priority" in Reference on the next page.

Synchronous printing: Performs digital printing with the same speed as the analog recording.

Asynchronous printing: Stops analog recording and performs digital printing. After digital printing is completed, restarts analog printing.

[Note]

Logging printing will not be in the printing queue. At the start time of Logging printing, if prior Logging printing is printing, the next log will not print. In this case, prolonging the printing interval of the Logging printing is recommended.

6.4 Digital Printing

Digital printings listed below are performed by key operation.

- Manual printing
- List printing
- Engineering list printing
- Recording Start/Stop printing

Digital printings listed below are performed by DI input.

- DI Manual printing
- DI Date/Time printing
- DI Comment printing

[Reference]

Printing is activated in the following priority order. When multiple types of printing are activated simultaneously, higher-priority printing takes effect first by following the priority order. However, while alarm printing is performed, lower category (Logging, DI Manual) is activated at the same time.

(See Fig. 6.3.3. Alarm Time printing and Logging printing are performed at the same time).

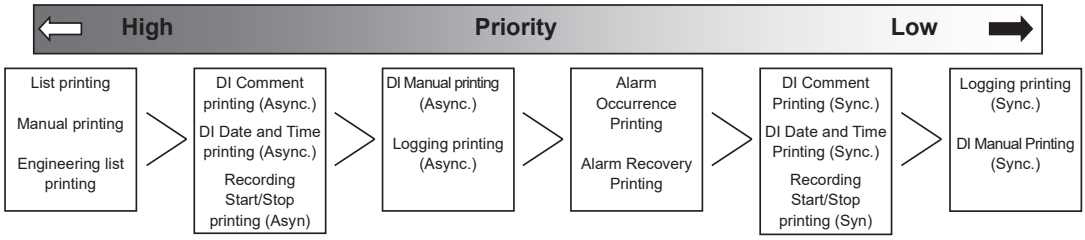

The Synchronous printout synchronizes with the analog recording, and executes digital printout.

In the case of asynchronous printout, an analog recording stops and a digital printout is executed.

After the digital printout is completed, the analog recording resumes.

6.4.1 Manual Printing

Prints the following data on the chart paper:

- Time/date (year, month, day)
- Channel number/Tag setting characters
- Activated alarm type/latest process variable/engineering unit (all channels)

(1) Manual printing operating procedure

1) Press the “PRINT” key.

2) Use the “PRINT” key to display “mAn”, and press the “ENT” key.

3) Use the “PRINT” key to select “StArt”. Pressing the “ENT” key executes manual printing.

Once manual printing starts, the display automatically returns to the Data Display screen.

When manual printing is finished, the display returns to the status prior to starting manual printing.

[Note]

(1) Analog recording is interrupted while manual printing is running. However, measurement/alarm detection remains effective.

(2) If an alarm is activated while manual printing is running, alarm printing will start from the time when manual printing finished.

(2) Manual printing stopping procedure

1) Press the “PRINT” key.

2) Use the “PRINT” key to display “mAn” , and press the “ENT” key.

3) Use the “PRINT” key to select “StoP” . Pressing the “ENT” key stops manual printing.

However, for the line during printing, printing will continue until the line is completely printed. Then manual printing will stop, and the display will return to the status prior to starting manual printing.

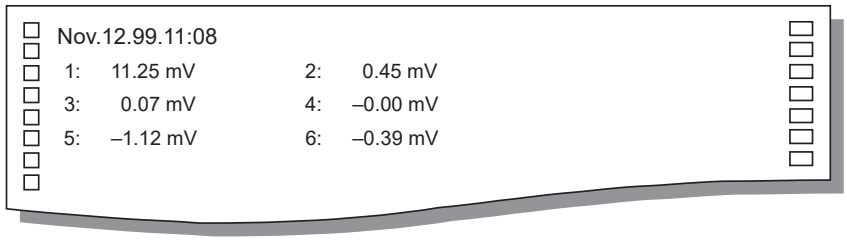

Fig. 6.4.1 Manual Printing

6.4.2 List Printing

Prints the following setting data of the instrument on the chart paper:

- Date/time/Chart feed speed/2nd chart feed speed/Printing cycle
- Channel number/range/scaling value/engineering unit
- Setting alarm type

(1) List printing operating procedure

1) Press the “PRINT” key.

2) Use the “PRINT” key to display “LIST”, and press the “ENT” key.

3) Use the “PRINT” key to select “StArt”. Pressing the “ENT” key executes the list printing.

Once list printing starts, the display automatically returns to the Data Display screen.

Upon termination of the list printing, the display returns to the status prior to starting list printing.

[Note]

(1) Analog recording is interrupted while list printing is running. However, measurement/alarm detection remains effective.

(2) If an alarm is activated while list printing is running, alarm printing starts when recording restarts.

(2) List printing stopping procedure

1) Press the “PRINT” key.

2) Use the “PRINT” key to display “LI St”, and press the “ENT” key.

3) Use the “PRINT” key to select “StoP” . Pressing the “ENT” key stops list printing.

However, printing continues until the line is completely printed. Then list printing is stopped, and the display returns to the status prior to starting list printing.

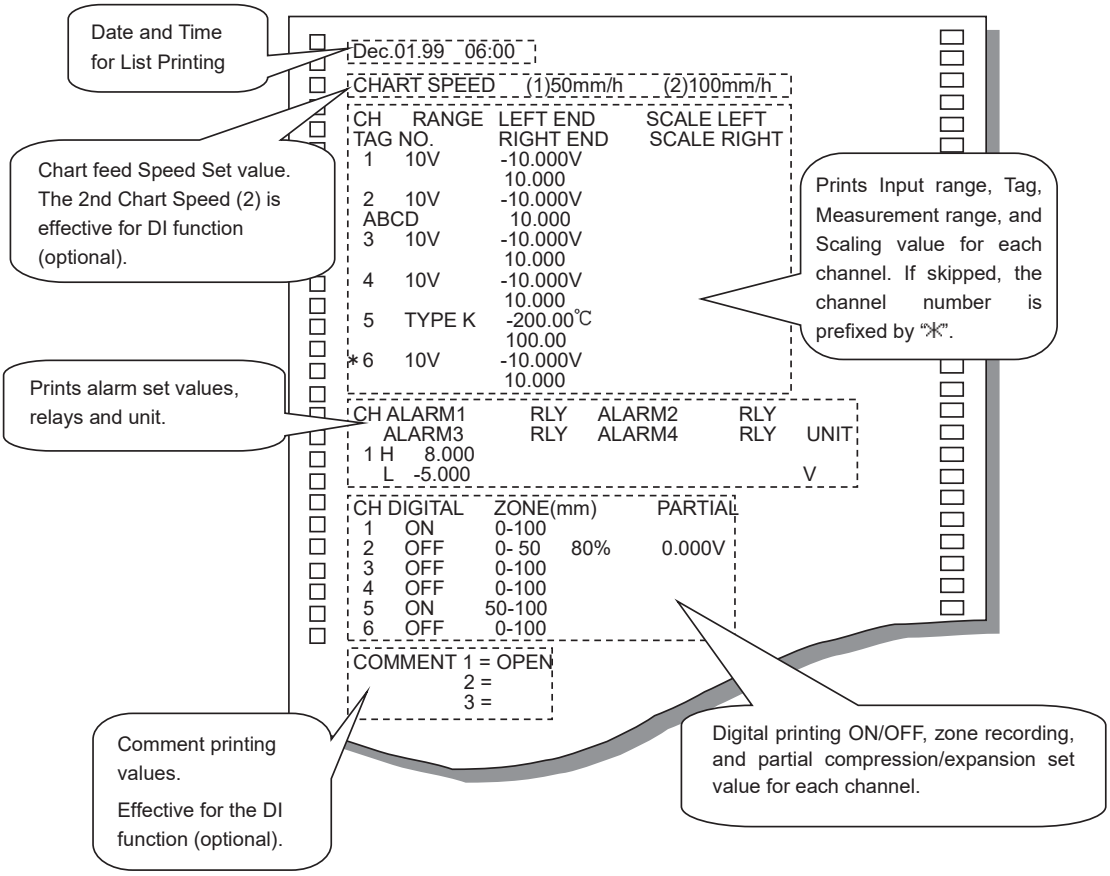

Fig. 6.4.2 List Printing

6.4.3 Engineering List Printing

Engineering list printing provides the following setting data of the instrument on the chart paper.

- Analog recording
- Digital printing
- Burnout/RJC, etc.

(1) Engineering list printing operating procedure

1) Press the “MENU” key.

2) Use the “PRINT” key to display “ELI SE”, and press the “ENT” key.

3) Use the “PRINT” key to select “SERrt”. Pressing the “ENT” key executes engineering list printing.

Once engineering list printing starts, the display automatically returns to the Data Display screen. Upon termination of the engineering list printing, the display returns to the status prior to starting engineering list printing.

[Note]

- Analog recording is interrupted while engineering list printing is running. However, measurement/alarm detection remains effective.
- If an alarm is activated while engineering list printing is running, alarm printing is performed when recording restarts.

(2) Engineering list printing stopping procedure

1) Press the “MENU” key.

2) Use the “PRINT” key to display “ELI St”, and press the “ENT” key.

3) Use the “PRINT” key to select “StoP”. Pressing the “ENT” key stops engineering list printing. However, the printing continues until the line is completely printed.

Then Engineering list printing stops. And the display returns to the status prior to starting engineering list printing.

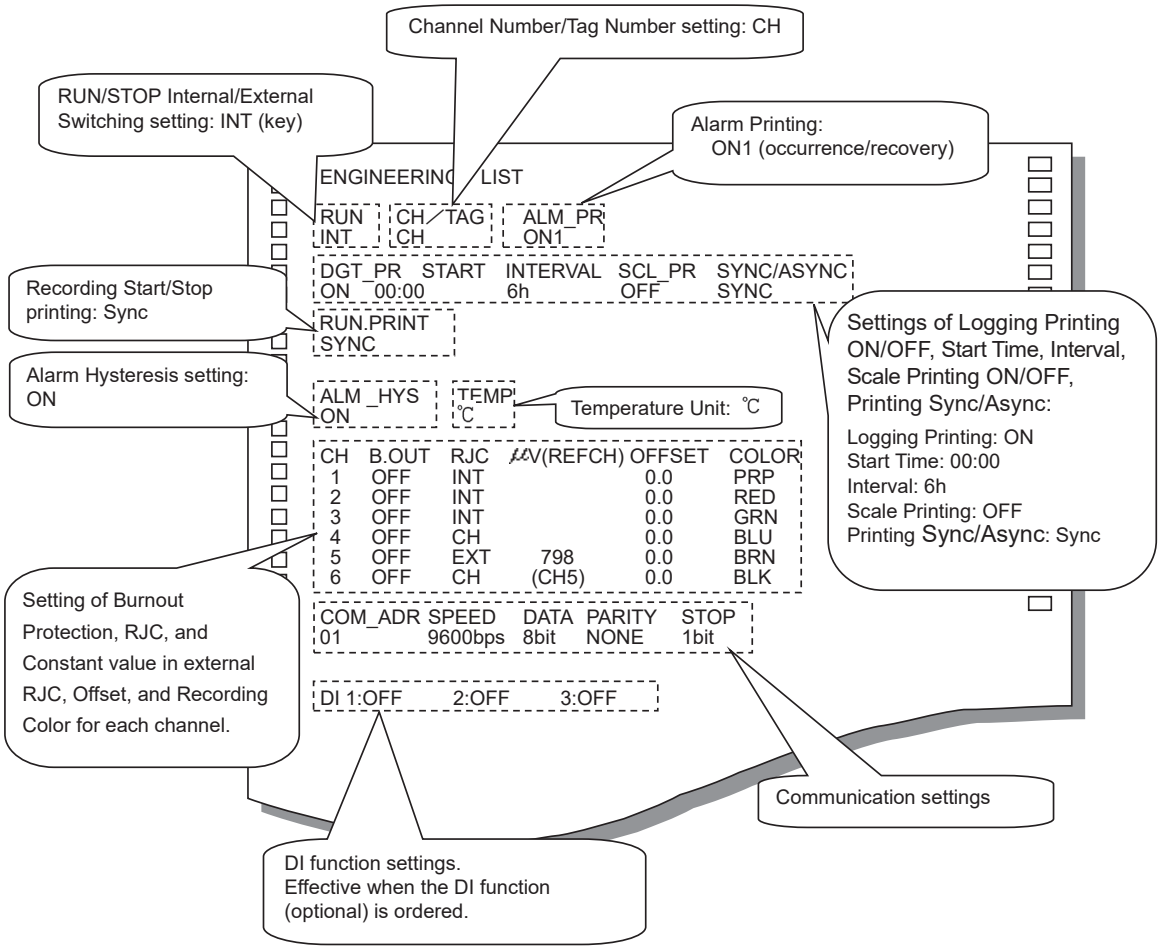

Fig. 6.4.3 Engineering List Printing

6.4.4 Recording Start/Stop Printing

Recording Start and Stop times are printed on the chart paper when recording starts and stops.
Recording Start/Stop printing can be set in Engineering Mode.
Refer to Section 7.2.6 (6) Recording Start/Stop printing.

[SYnC]: Recording Start synchronous printing
Recording Stop printing is asynchronous.
[ASYnC]: Recording Start/Stop asynchronous printing
[oFF]: Recording Start/Stop times are not printed.

(1) Recording start printing
Press the REC key in the Recording Stop status in order to enable recording status.
Printing will start.
If Recording Start/Stop printing is set to OFF, printing will be disabled.

(2) Recording stop printing
Press the REC key for 4 seconds or longer in the Recording Start status in order to enable recording stop status.
Printing will start.
If Recording Start/Stop printing is set to OFF, printing will be disabled.

[Note]
If DI function is used for Recording Start/Stop, printing will start by DI function, not via the keypad.

6.4.5 DI Manual Printing (DI option)

DI Manual printing occurs by turning the DI from OFF to ON. Current measured value and time will be printed on the chart paper.
Printing contents are the same as Section 6.4.1 Manual Printing.

(1) Select Manual Printing of DI function in Engineering Mode.
For detailed setting method, refer to Section 7.2.9 DI Functions.
[MAN-P]: Synchronous Manual printing
[AMAN-P]: Asynchronous Manual printing

(2) Turn the DI input ON.
DI Manual printing starts by turning the DI input from OFF to ON.

6.4.6 DI Date/Time Printing (DI option)

DI Date/Time printing starts by turning the DI input from OFF to ON. Current date and time will be printed on the chart paper.

(1) Select Date/Time printing of DI function in Engineering mode.
For detailed setting method, refer to 7.2.9 DI Functions.
[TIM-P]: Synchronous Date/Time printing
[ATIM-P]: Asynchronous Date/Time printing

(2) Turn the DI input ON.
DI Date/Time printing starts by turning the DI input from OFF to ON.

6.4.7 DI Comment Printing (DI option)

DI Comment printing starts by turning the DI input from OFF to ON. Comment printing can be performed on the chart paper.

(1) Select Comment Printing of DI function in Engineering mode.

For detailed setting method, refer to 7.2.9 DI Functions.

[CMNT1], [CMNT2], [CMNT3]: Synchronous comment printing

[ACMT1], [ACMT2], [ACMT3]: Asynchronous comment printing

(2) Turn the DI input ON.

DI Comment printing starts by turning the DI input from OFF to ON.

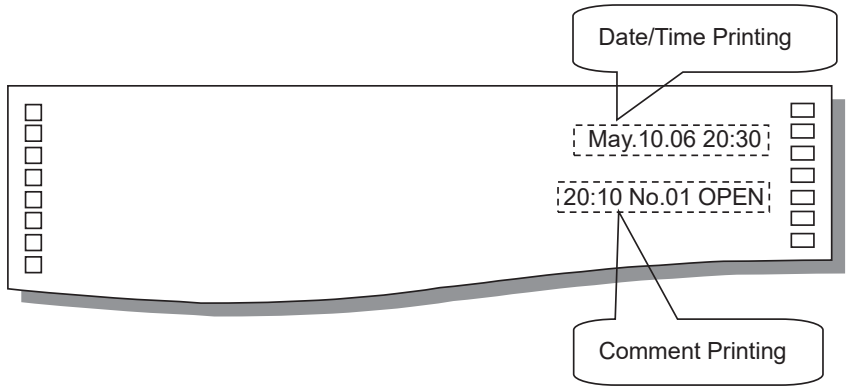

Fig. 6.4.7 Date/Time Printing, Comment Printing

6.5 Changing the Display

Display selection procedure

(1) Press the “MENU” key to display "dI SP", then press the “ENT” key.

(2) Use the “PRINT” key to select a required screen from the menu below.
Then press the “ENT” key.

(3) "Ch□" is displayed in the case of manual display. Use the “PRINT” key to select the channel number, then press the “ENT” key.

“AUto”(AUTO): Auto display
“mAn”(MAN): Manual display
“dAtE”(DATE): Date display
“tI mE”(TIME): Time display
“oFF”(OFF): Display OFF

6.5.1 AUto <Auto Display>

Displays the process variable of each channel sequentially at intervals of 2.5 seconds.

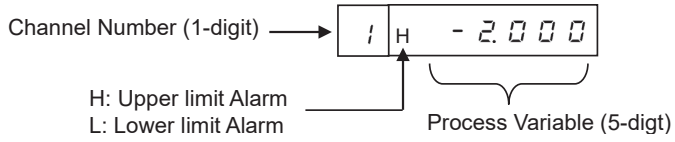

6.5.2 mAn <Manual Display>

Displays the process variable of the specific channel, and updates it every measurement cycle. The data is the same as that of Auto display. Pressing the “ENT” key changes to the next displayed channel number.

6.5.3 dAtE <Date Display>

Displays the month and day. Leap year is adjusted automatically.

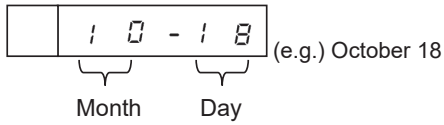

6.5.4 tI mE <Time Display>

Displays the hour and minute.

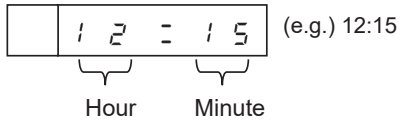

6.5.5 oFF <Display Off>

Turns off the process variable display. Key operation is the same as usual.
To switch to other displays, repeat steps (1) through (3) mentioned above.

7. DEVICE SETTING

7.1 Setting the Setup Mode

WARNING

When calibrating data, connect equipment according to Section 9.5 of the instruction manual.
Data calibration must be performed correctly.
Operators possessing knowledge of electricity and control related matters should perform the calibration after careful reading of Sections 7.2 and 9.5 of the instruction manual.
(Shinko Technos Co., Ltd. is not liable for damages incurred if calibration is performed other than prescribed in the instruction manual.)

Key Operation for Entering Setup Mode

Press the “MENU” key for 3 seconds or longer to enter setup mode.
The software version is displayed approximately 1 second as below. After that, the setting screen of the range is displayed.

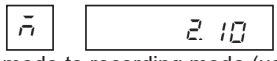

(e.g.) Version number: 2.10

To return from setup mode to recording mode (user mode), press the “MENU” key for 3 seconds or longer again.

The following describes how to set the following items.

The following shows a display map of the setup mode. Use the △ key for operation.

● 7.1.1 Setting the Range

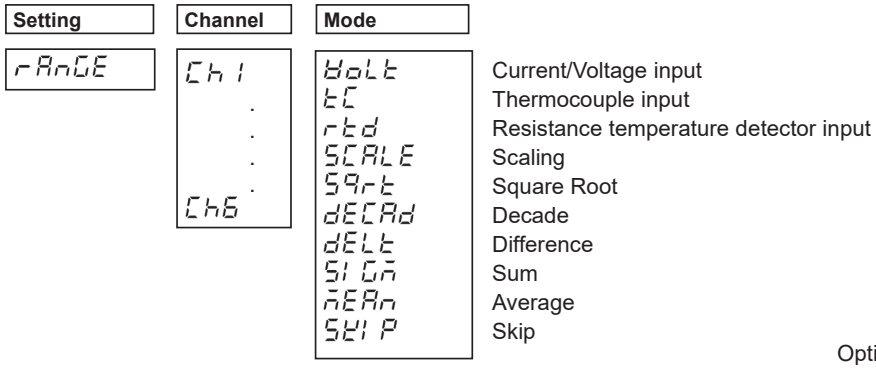

Current/Voltage input
Thermocouple input
Resistance temperature detector input
Scaling
Square Root
Decade
Difference
Sum
Average
Skip

● 7.1.2 Setting the Alarm

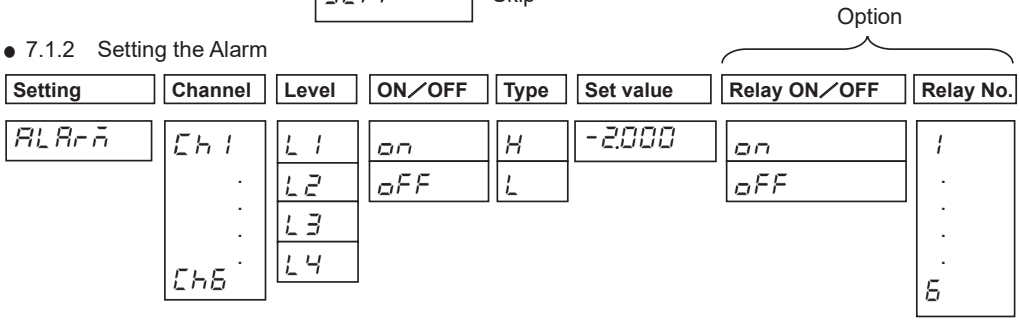

● 7.1.3 Setting the Unit

Setting	Channel	Char. No.	Code No.	
Unit	Ch1	1	Cd bF	(°)
	.	2	Cd 43	(C)
	.	3	Cd 00	End
	.	4		
	Ch6	5		
		6		

● 7.1.4 Setting the Chart Feed Speed

Setting	1st/2nd Chart speed	Chart speed
CHArt	SPd-1	1500
	SPd-2	

● 7.1.5 Setting the Date and Time

Setting	Year	Month, Day	Time
CLoCt	Y 2000	A01-01	t06:00

● 7.1.6 Copying the Setting Data

Setting	Channel to copy from	Channel to copy to
CoPY	F Ch1	t Ch2
	F Ch2	t Ch3
	.	.
	.	.
	.	.
	F Ch5	t Ch6

● 7.1.7 Setting Other Functions (Printing Cycle, Zone Recording, Partial Compression/Expansion, Digital Printing, Tag, Comments)

Setting	Mode	
AUX1	trEnd	Printing Cycle
	ZonE	Zone Recording
	PArt	Partial Compression/Expansion
	Print	Digital Printing
	tAG	Tag
	CMnt	Comments

● Shift to the engineering mode

Setting	Password	
EnG	P 0000	Input the password to enter engineering mode.
		See the key operation on page 69.

Table 7.1 Default value of the setup mode

Setting items	Default value	Remarks
Range (all channels)	±10 mV Scaling 0 to 100.0 (℃)	
Alarm (all channels)	All levels alarm OFF, relay OFF	
Engineering unit (all channels)	℃ (BF 43 00)	
Chart feed speed	1st speed: 20 mm/h 2nd speed: 20 mm/h	
Time	2000/01/01, 00:00	The present time has been set. (Japan standard time) GMT + 09:00
Dot point interval	10 (sec)	
Zone setting (all channels)	0 to 100 (%)	
Partial compression/expansion (all channels)	OFF	
Digital printing (all channels)	ON	
Tag printing character (all channels)	“Blank up to the 7th character”	
Comment printing word (1 to 3)	“Blank up to the 16th character”	

7.1.1 Setting the Range

(1) Setting method

With a multirange system, setting the range for each channel is possible.

Use the △ key to shift the mode ① to ⑩ shown in the Table below.

Set the range from the following input signals. (Modes ① to ③)

DC voltage: ±10 mV DC, 0 to 20 mV DC, 0 to 50 mV DC, ±200 mV DC, ±1 V DC, 0 to 5 V DC, ±10 V DC

Direct current: 4 to 20 mA DC (External shunt resistor: 250 Ω)

Thermocouple: B, R, S, K, E, J, T, C, Au-Fe, N, PR10-20, PL-Ⅱ, U, L

RTD: Pt100, JPt100

For the thermocouple and RTD, an optimum range is automatically selected depending on the set span point.

Sets scaling, square root, decade, interchannel sum/difference/average. (Modes ④ to ⑨)

Unnecessary channels can be skipped. (Mode ⑩)

Setting	Channel	Mode		Key
rAnGE	Ch 1 Ch 2 Ch 3 Ch 4 Ch 5 Ch 6 Can be set for all channels.	①	bALt (Voltage, Current)	△ key
		②	tC (Thermocouple)	
		③	rtd (Resistance temperature detector)	
		④	SCALE (Scaling)	
		⑤	Sqrt (Square root)	
		⑥	dECAd (Decade)	
		⑦	dELt (Difference)	
		⑧	SUM (Sum)	
		⑨	AVEr (Average)	
		⑩	SKIP (Skip)	

[Note]

A decimal point arbitrary position can be set only in "scaling" and "square root" modes. When altering the decimal point position in Voltage/Current/Thermocouple/RTD input, set it in the "scaling" mode. To fix the decimal point position, set it as follows.

Input	Digits after decimal point		Input	Digits after decimal point	
mV	2 digits	✳✳✳.00	Thermocouple	1 digit	✳✳✳✳.0
±1, 0 to 5 V	3 digits	✳✳.000	RTD	1 digit	✳✳✳✳.0
±10 V	2 digits	✳✳✳.00	±200 mV DC	1 digit	✳✳✳✳.0
mA	2 digits	✳✳✳.00			

(2) volt (Current/Voltage), tC (Thermocouple), rtd (Resistance Temperature Detector)

[Note]: When changing a decimal point position, change it during (3) Scaling (pp. 48, 49).

Measures Current, Voltage, Thermocouple and RTD.

Example: When setting Thermocouple T for Channel 1 (T: -100 to 300℃)

Display	Operation keys	Description
rAnGE	ESC MENU 3 sec ENT	Press the “MENU” key for 3 seconds or longer to enter setup mode. "rAnGE" is displayed, then press the “ENT” key.
Ch 1	△ PRINT ENT	Use the △ key to select the desired channel. Press the “ENT” key.
tC	△ PRINT ENT	Use the △ key to select the mode. Press the “ENT” key.
t	△ PRINT ENT	Use the △ key to select a type. Press the “ENT” key.
L - 100.0 (Zero setting)	△ PRINT ▷ FEED ENT	Use the △ key to select a sign and numeral. Use the ▷ key to shift a digit. Press the “ENT” key.
r 300.0 (Span setting)	△ PRINT ▷ FEED ENT	Use the △ key to select a sign and numeral. Use the ▷ key to shift a digit. Press the “ENT” key.
-SEt-	ENT	Press the “ENT” key. Setting is completed. To return to user mode, press the “MENU” key for 3 seconds or longer.

[Note]

- When an incorrect numeral is entered, E Err21 or E Err24 is displayed.
  Press the “ENT” key and re-enter the correct numeral.
- Perform range settings that do not need the scaling at this step (2) volt, tC, rtd.
  (Be especially sure to perform the thermocouple and RTD range settings for which decimal point position change is not necessary.) (One digit after the decimal point is standard.)
  Do not perform scaling here.

[Note]

In volt, tC, or rtd mode, press the “ENT” key to select the range.

Use the △ key to select a range type.

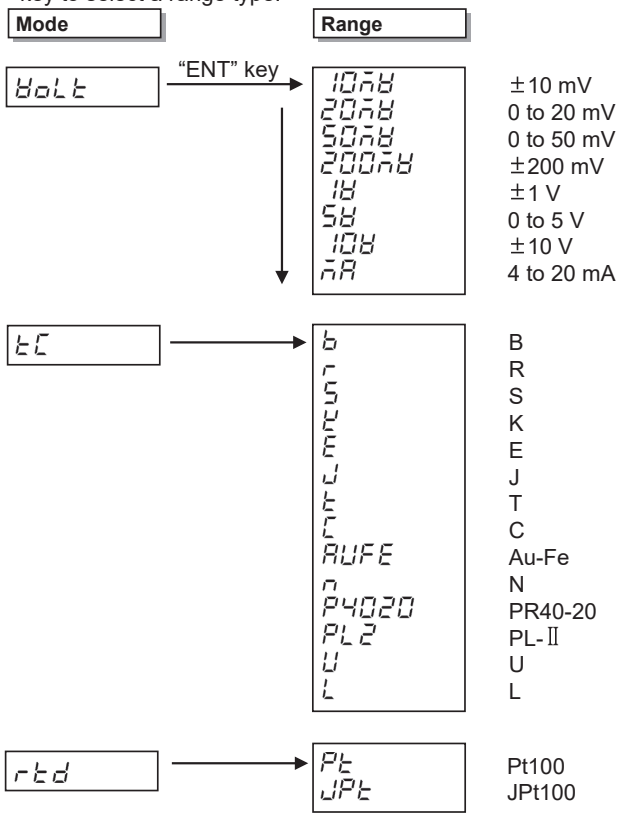

[Reference]

The following ranges (input types) have more than one measurement range, and their accuracy is different depending on the measurement range. An optimum range (input type) is automatically selected by the set span point.

Thermocouple (tC): R, K, E, J, T

RTD (rtd): Pt100, JPt100

(3) SCALE (Scaling)

Converts the input of VOLT, TC and RTD to a corresponding value.

Setting the unit is possible. (See 7.1.3 on page 58)

Example: When setting the voltage of 0 to 40 mV and scale of 000.00 to 100.00 for Channel 1.

Display	Operation keys	Description
rAnGE	ESC MENU 3 sec ENT	Press the “MENU” key for 3 seconds or longer to enter setup mode. "rAnGE" is displayed, then press the “ENT” key.
Ch 1	PRINT ENT	Use the △ key to select the desired channel. Press the “ENT” key.
SCALE	PRINT ENT	Use the △ key to select "SCALE". Press the “ENT” key.
VoLt	PRINT ENT	Use the △ key to select "VoLt". Press the “ENT” key. If tC or rtd is selected here, temperature input scaling is possible.
50mV	PRINT ENT	Use the △ key to select a range (50 mV). Press the “ENT” key.
L 000.00 (Zero input value)	PRINT FEED ENT	Use the △ key to select a numeral. Use the ▷ key to shift a digit. Press the “ENT” key.

[Note]

In the case of TC and RTD inputs, set the Zero input value equal to the Zero-side scale value. See ✳1 on the next page.

r 040.00 (Span input value)	PRINT FEED ENT	Use the △ key to select a numeral. Use the ▷ key to shift a digit. Press the “ENT” key.

[Note]

In the case TC and RTD inputs, set the Span input value equal to the Span-side scale value.

See ✳2 on the next page.

L	0000.0	PRINT FEED	Use the △ key to select a numeral. Use the ▷ key to shift a digit.
(Zero-side scale value) (✳1)			
L	000.00	FEED PRINT ENT	Press the ▷ key again in the lowest digit (at right) to flash a decimal point. Use the △ key to select a decimal point position. Press the “ENT” key.
(Decimal point)			
r	100.00	PRINT FEED ENT	Use the △ key to select a numeral. Use the ▷ key to shift a digit. Press the “ENT” key.
(Span-side scale value) (✳2)			
	-SEt-	ENT	Press the “ENT” key. Setting is completed. To return to user mode, press the “MENU” key for 3 seconds or longer.

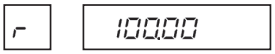

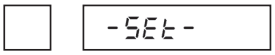

[Note]

When an incorrect numeral is entered, E Err21 , E Err24 or E Err25 is displayed.

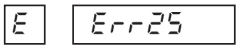

Press the “ENT” key and re-enter the correct numeral.

(4) SQRT (Square Root)

Caluclates the square root of Volt input, and scales the value.

The unit can be set. (See 7.1.3 on page 58.)

Example: Setting the voltage of 0 to 40 mV and scale of 000.00 to 100.00 for Channel 1.

Display	Operation keys	Description
RANGE	ESC MENU 3 sec ENT	Press the “MENU” key for 3 seconds or longer to enter setup mode. "RANGE" is displayed, then press the “ENT” key.
CH 1	PRINT ENT	Use the △ key to select the desired channel. Press the “ENT” key.
SQRT	PRINT ENT	Use the △ key to select "SQRT". Press the “ENT” key.
50.00	PRINT ENT	Use the △ key to select a range (50mV). Press the “ENT” key.
L 000.00 (Zero input value)	PRINT FEED ENT	Use the △ key to select a numeral. Use the ▷ key to shift a digit. Press the “ENT” key.
r 040.00 (Span input value)	PRINT FEED ENT	Use the △ key to select a numeral. Use the ▷ key to shift a digit. Press the “ENT” key.
L 000.0 (Zero-side scale value)	PRINT FEED	Use the △ key to select a numeral. Use the ▷ key to shift a digit.
L 000.00 (Decimal point)	FEED PRINT ENT	Press the ▷ key again at the lowest digit (at right) to flash a decimal point. Use the △ key to select a decimal point position. Press the “ENT” key.
r 100.00 (Span-side scale value)	PRINT FEED ENT	Use the △ key to select a numeral. Use the ▷ key to shift a digit. Press the “ENT” key.
-SET-	ENT	Press the “ENT” key. Setting is completed. To return to user mode, press the “MENU” key for 3 seconds or longer.

[Note]

If an incorrect numeral is entered, E Err21 , E Err24 or E Err25 is displayed.

Press the “ENT” key and re-enter a correct numeral.

About Square Root Computation

The square root computation is as follows:

- Each item is defined as follows:

  $SPAN_L$: Span lower-limit value (Span L)

  $SPAN_R$: Span upper-limit value (Span R)

  $SCAL_L$: Scaling lower-limit value (Scale L)

  $SCAL_R$: Scaling upper-limit value (Scale R)

  IN : Input voltage

  OUT : Output (Scaling value)

- When an input value is 1% or more (1 to 100%)

$$OUT = (SCAL_R - SCAL_L) \times \sqrt{\frac{IN - SPAN_L}{SPAN_R - SPAN_L}} + SCAL_L$$

- When an input value is less than 1%

$$OUT = \frac{10 \times (SCAL_R - SCAL_L)}{SPAN_R - SPAN_L} \times (IN - SPAN_L) + SCAL_L$$

Example: When setting on the previous page is performed, the display is shown as below.

Input voltage (mV)	0	10	20	30	40
Display (%)	0.00	50.00	70.71	86.63	100.00

[Note]

The relation between scaling factor and displaying digit may stagger the accuracy rating.

(5) dECAd (Decade)

Scaling the VOLT input and displays the index number. Setting the unit is possible. (See 7.1.3 on page 58)

Example: When setting the voltage of 0 to 5 V and decade of 1.0×10^{0} to 1.0×10^{5} for Channel 1.

Display	Operation keys	Description
rAnGE	ESC MENU 3 sec, ENT	Press the “MENU” key for 3 seconds or longer to enter setup mode. "rAnGE" is displayed, then press the “ENT” key.
CH 1	△ PRINT, ENT	Use the △ key to select the desired channel. Press the “ENT” key.
dECAd	△ PRINT, ENT	Use the △ key to select "dECAd". Press the “ENT” key.
5V	△ PRINT, ENT	Use the △ key to select a range (5V). Press the “ENT” key.
L 00.000 (Zero input value)	△ PRINT, ▷ FEED, ENT	Use the △ key to select a numeral. Use the ▷ key to shift a digit. Press the “ENT” key.
r 05.000 (Span input value)	△ PRINT, ▷ FEED, ENT	Use the △ key to select a numeral. Use the ▷ key to shift a digit. Press the “ENT” key.
L 1.0E00 (Zero-side scale value)	△ PRINT, ▷ FEED, ENT	Use the △ key to select a numeral. Use the ▷ key to shift a digit. Press the “ENT” key.
r 1.0E05 (Span-side scale value)	△ PRINT, ▷ FEED, ENT	Use the △ key to select a numeral. Use the ▷ key to shift a digit. Press the “ENT” key.
-SEt-	ENT	Press the “ENT” key. Setting is completed. To return to user mode, press the “MENU” key for 3 seconds or longer.

[Note]

When an incorrect numeral is entered, E Err21, E Err24 or E Err25 is displayed.

Press the “ENT” key, and re-enter a correct numeral.

About Decade Display

- Each item is defined as follows:

  $SPAN_L$: Span lower limit value (Span L)

  $SPAN_R$: Span upper limit value (Span R)

  $SCAL_L$: Scaling lower limit value (Scale L)

  $SCAL_R$: Scaling upper limit value (Scale R)

  IN : Input voltage

  OUT : Output (Scaling value)

  XXEYY

  XX: Mantissa section (1.0 to 9.9)
  YY: Exponent section (-19 to 19)
  Up to 5 decades.
  (Scaling upper limit)–(Scaling lower limit) is 1.0E5 or less.

- Decade display adheres to the following relational expression.

$$OUT1 = IN \times \frac{LGSCAL_R - LGSCAL_L}{SPAN_R - SPAN_L} + \frac{SPAN_R \times LGSCAL_L - SPAN_L \times LGSCAL_R}{SPAN_R - SPAN_L}$$

$$OUT = 10^{OUT1}$$

$LGSCAL_L : Log_{10}(SCAL_L)$

$LGSCAL_R : Log_{10}(SCAL_R)$

[Note]

Decade output is used for display and printing. It is not reflected in a printing position.

Example: When setting on the previous page is performed, the display is shown as below.

Input voltage (V)	0.0	1.0	2.5	3.0	5.0
Display	1.0E0	1.0E1	3.2E2	1.0E3	1.0E5

(6) dELt (Difference), SUM (Sum), MEAn (Average)

Caluclates the input of VOLT, TC, RTD or SCALE, and outputs it.

Example: Subtracting Ch1 input data from Ch6 input data to set the difference value to Ch6. (0 to 40 mV)

"Ch6 (input) - Ch1 (input)" is recorded and displayed on Ch6.

Display	Operation keys	Description
rAnGE	ESC MENU 3 sec, ENT	Press the "MENU" key for 3 seconds or longer to enter setup mode. "rAnGE" is displayed, then press the "ENT" key.
Ch6 (Channel to be set)	△ PRINT, ENT	Use the △ key to select the desired channel. Press the "ENT" key.
dELt	△ PRINT, ENT	Use the △ key to select "dELt". Press the "ENT" key.
Ch 1 (Reference channel)	△ PRINT, ENT	Use the △ key to select the desired channel subtracted. Press the "ENT" key.
L 000.00 (Zero input value after difference computation)	△ PRINT, ▷ FEED, ENT	Use the △ key to select a numeral. Use the ▷ key to shift a digit. Press the "ENT" key.
r 040.00 (Span input value after difference computation)	△ PRINT, ▷ FEED, ENT	Use the △ key to select a numeral. Use the ▷ key to shift a digit. Press the "ENT" key.
-SEt-	ENT	Press the "ENT" key. Setting is completed. To return to user mode, press the "MENU" key for 3 seconds or longer.

[Note]

If an incorrect numeral is entered, E Err21 , E Err23 or E Err24 is displayed.

Press the "ENT" key and re-enter a correct numeral.

About Difference, Sum and Average

- The channel to be set must be larger than the one which computes the "difference, sum or average" value.
  (e.g.) When setting to Ch6, a value from Ch1 to Ch5 can be subtracted from Ch6.
- The range and scale of the channel to be set is the same as those of the reference channel which computes the "difference, sum or average" value.
- The range value after computation cannot exceed the maximum range of the instrument.
- For the reference channel, only the voltage, current, thermocouple, RTD, and their scaling ranges can be set.

(7) SKIP (Skip)

Set SKIP to the channel for which display and recording are not required.

Example: When skipping Channel 6.

Display	Operation keys	Description
rANGE	ESC MENU 3 sec △ PRINT ENT	Press the “MENU” key for 3 seconds or longer to enter setup mode. Use the △ key to display "rANGE". Press the “ENT” key.
Ch6	△ PRINT ENT	Use the △ key to select the desired channel. Press the “ENT” key.
SKIP	△ PRINT ENT	Use the △ key to select "SKIP". Press the “ENT” key.
-SET-	ENT	Press the “ENT” key. Setting is completed. To return to user mode, press the “MENU” key for 3 seconds or longer.

[Note]

- If all channels are set to “Skip”, E Err28 is displayed.
  At least one channel should be set to Measurement.
- Measurement can be conducted on a skipped channel, however, display, printing or alarm assessment cannot be performed.
  If input is not connected, be sure to short-circuit the input terminal.
- To return the skipped settings to the measurement settings, set the measurement range again.

7.1.2 Setting the Alarm

Setting items

The following 2 alarm types can be set to each channel.
Up to 4 alarm points (4 levels) can be set per channel.
Once alarm point is set, the “ALM” lights when PV (process variable) reaches alarm point, and simultaneously, the alarm is printed on the chart paper, indicating an alarm occurrence.

H: Upper limit alarm --- When the process variable is higher than the alarm set point, an alarm is issued.

L : Lower limit alarm --- When the process variable is lower than the alarm set point, an alarm is issued.

Operation

Setting	Channel	Level	ON/OFF	Type	Setting value	Option: Relay ON/OFF	Option: Relay No.
ALArm	Ch1	L1	on	H	-2.000	on	1
	.	L2	oFF	L		oFF	.
	.	L3					.
	.	L4					.
	Ch6						6

Example: When setting Channel 1 alarm point (Level 1) to the following:

Upper limit alarm, set value of -2.000, Alarm output relay No. 1

	Display	Operation keys	Description
	ALArm	ESC MENU 3 sec △ PRINT ENT	Press the “MENU” key for 3 seconds or longer to enter the setup mode. Use the △ key to display "ALArm". Press the “ENT” key.
	Ch1	△ PRINT ENT	Use the △ key to select the desired channel. Press the “ENT” key.
1	L1	△ PRINT ENT	Use the △ key to select an alarm level. Press the “ENT” key. Up to 4 levels can be set.
1	on	△ PRINT ENT	Use the △ key to select alarm setting ON. Press the “ENT” key. Setting to "oFF" displays "ALArm" and completes setting.
1	H	△ PRINT ENT	Use the △ key to select an alarm type. Press the “ENT” key.
1	-2.000	△ PRINT ▷ FEED ENT	Set an alarm point. Use the ▷ key to shift a digit, and use the △ key to select a numeral. Once setting is completed, press the “ENT” key. A decimal point position is fixed depending on the range.

[Note]

When the “ENT” key is pressed during the alarm point setting process, display will switch to the next setting display.

Setting hereinafter is valid only for the model to which an alarm output (option: LH6) has been ordered. If the option has not been ordered, press the “ENT” key until "-SET-" is displayed. Then, press the “ENT” key again. Setting is completed.

Display	Operation keys	Description
1 on	△ PRINT ENT	When an alarm occurs, the alarm output is issued from the alarm output relay. Use the △ key to select alarm output ON, and press the “ENT” key. If the alarm output is not used, select OFF, and press the “ENT” key.
1 1	△ PRINT ENT	If the alarm output is set to ON, set the relay number. Use the △ key to select a relay number (1 to 6), and press the “ENT” key.
-SET-	ENT	Press the “ENT” key. Setting is completed. To continue to set other channels, press the △ key to select a channel, and start setting. To return to user mode, press the “MENU” key for 3 seconds or longer.

[Note]

For Alarm printing, the channel number is printed even if the tag printing has been set.

7.1.3 Setting the Unit

Setting Items

Sets the temperature unit for each channel.

> **[Note]**
> To change the unit in the range of Volt, tC or rtd, set the range to SCALE.

Operation

Setting	Channel	Char. No.	Code No.	
Unit	Ch1 . . . Ch6	1	Cd 6F	(°)
		2	Cd 43	(C)
		3	Cd 00	End
		4		
		5		
		6		

Example: Setting the unit (℃) for Channel 1.

Display	Operation keys	Description
Unit	ESC MENU 3 sec PRINT ENT	Press the “MENU” key for 3 seconds or longer to enter the setup mode. Use the △ key to display "Unit". Then, press the “ENT” key.
Ch1	PRINT ENT	Use the △ key to select the desired channel. Then, press the “ENT” key.
1 Cd 6F (Code No.)	PRINT FEED ENT	Use the △ or ▷ key to select the 1st character of the code number, and press the “ENT” key. See Character code table on the next page.
2 Cd 43	PRINT FEED ENT	Set the 2nd character in the same manner.
3 Cd 00	PRINT FEED ENT	When the number of unit characters is less than 6, enter the code (00) to finish. Press the “ENT” key.
-SEt-	ENT	Press the “ENT” key. Setting is completed. To return to user mode, press the “MENU” key for 3 seconds or longer.

> **[Note]**
> The unit setting is effective only when the range setting is SCALE, Sqrt, dECAd, dELt, SIGn and nEAr (For the dELt, SIGn and nEAr, the unit setting is effective only when reference channel range is set to SCALE).
> For other range settings, the unit is automatically determined according to the range.

(1) Character code table

	2 ✳	3 ✳	4 ✳	5 ✳	6 ✳	7 ✳	A ✳	B ✳	C ✳	D ✳	E ✳	F ✳
✳ 0	SP	0	@	P		p	$_0$	^{0}		Π		π
✳ 1	!	1	A	Q	a	q	$_1$	^{1}	A	P	α	ρ
✳ 2	"	2	B	R	b	r	$_2$	^{2}	B	Σ	β	σ
✳ 3	#	3	C	S	c	s	$_3$	^{3}	Γ	T	γ	τ
✳ 4	$	4	D	T	d	t	$_4$	^{4}	△	Y	δ	υ
✳ 5	%	5	E	U	e	u	$_5$	^{5}	E	Φ	ε	φ
✳ 6	&	6	F	V	f	v	$_6$	^{6}	Z	X	ζ	χ
✳ 7	'	7	G	W	g	w	$_7$	^{7}	H	Ψ	η	ψ
✳ 8	(	8	H	X	h	x	$_8$	^{8}	Θ	Ω	θ	ω
✳ 9	)	9	I	Y	i	y	$_9$	^{9}	I		ι	
✳ A	✳	:	J	Z	j	z			K		κ	
✳ B	+	;	K	[	k	{	$_+$	$^+$	Λ		λ	
✳ C	,	<	L	¥	l	|	±	∓	M	◿	μ	
✳ D	–	=	M	]	m	}			N	◢	ν	
✳ E	.	>	N	^	n	¯	$_-$	$^-$	Ξ	◺	ξ	
✳ F	/	?	O	_	o		$_\circ$	°	O	◣	o	

Setting example: The code number for "C" is "43".

7.1.4 Setting the Chart Feed Speed

Setting Items

Sets the chart feed speed. Select it from the table below.

Table 7.1.4 Chart Speed (Unit: mm/h)

0	1	2	3	4	5	10	15	20	25
30	40	50	60	75	80	90	100	120	150
160	180	200	240	300	360	375	450	600	720
750	900	1200	1500						

Operation

Setting	1st/2nd Chart feed speed	Chart feed speed
CHArt	SPd- 1 SPd-2	1500

Example: When setting the 1st chart feed speed to 1500 mm/h.

Display	Operation keys	Description
CHArt	ESC MENU 3 sec △ PRINT ENT	Press the “MENU” key for 3 seconds or longer to enter the setup mode. Use the △ key to display "CHArt", and press the “ENT” key.
SPd- 1	△ PRINT ENT	Use the △ key to select the 1st chart feed speed, and press the “ENT” key.

[Note]
When changing the chart feed speed using the DI function (option: RE6), set the 2nd chart feed speed.
If the DI function (option: RE6) is not ordered, setting of the 2nd chart feed speed becomes invalid.

Display	Operation keys	Description
1500	△ PRINT ▷ ENT	Use the △ key to set the 1st chart feed speed, and press the “ENT” key.
-SEt-	ENT	Press the “ENT” key. To return to user mode, press the “MENU” key for 3 seconds or longer.

[Note]

Restriction of printing by chart feed speed:

Printing type	Chart speed (mm/h)
Alarm occurrence printing, Alarm recovery printing, Affix printing, DI Comment printing (Synchronous), DI Date and Time printing (Synchronous), DI Manual printing (Synchronous), Recording start printing (Synchronous)	1 to 100 (mm/h)
Logging printing (Synchronous)	10 to 100 (mm/h)

When the chart speed is 0 mm/h, it is printed with forcible chart feed. (When the chart feed speed is higher than 120 mm/h, the table shown above is not printed.). List Printing, Engineering List Printing, Manual Printing (key), DI Comment printing (Asynchronous), DI Date and Time printing (Asynchronous), DI Manual printing (Asynchronous) and Logging printing (Asynchronous) are printed regardless of the chart feed speed.

7.1.5 Setting the Date and Time

Operation

The following figure describes how to set the date/time of the internal clock.

Setting	Year	Month, Day	Time
CLoCY	Y 2000	A 01-01	t 06:00

Example: When setting the date and time to January 1st, 2000, 6:00.

Display	Operation keys	Description
CLoCY	ESC MENU 3 sec	Press the “MENU” key for 3 seconds or longer to enter setup mode. Use the △ key to display "CLoCY", and press the “ENT” key.
Y 2000	△ PRINT ENT	Set the year. Use the △ key to select a numeral, and use the ▷ key to shift a digit. Press the “ENT” key.
A 01-01	△ PRINT ▷ FEED ENT	Set the month and day. Follow the same process as above.
t 06:00	△ PRINT ▷ FEED ENT	Set the time (Hour:Minute). Follow the same process as above.
-SEt-	ENT	Press the “ENT” key. To return to user mode, press the “MENU” key for 3 seconds or longer.

[Note]

If a non-existent date or time is entered, E Err22 is displayed.

Press the “ENT” key and re-enter a correct numeral.

7.1.6 Copying the Setting Data

Setting Items

The following describes how to copy the setting data of any channel to another channel.

The number of the channel to be copied must be bigger than the channel to copy from.

Operation

Setting	Channel to copy from	Channel to copy to
CoPy	F Ch1	t Ch2
	F Ch2	t Ch3
	.	.
	.	.
	.	.
	F Ch5	t Ch6

Example: When copying the setting data of Channel 1 to Channel 2.

Display	Operation keys	Description
CoPy	ESC MENU 3 sec	Press the “MENU” key for 3 seconds or longer to enter setup mode. Use the △ key to display "CoPy", and press the “ENT” key.
	△ PRINT ENT	
F Ch1	△ PRINT ENT	Use the △ key to select the channel to copy from, and press the “ENT” key.
t Ch2	△ PRINT ENT	Use the △ key to select the channel to copy to, and press the “ENT” key.
-SEt-	ENT	Press the “ENT” key. To return to user mode, press the “MENU” key for 3 seconds or longer.

7.1.7 Setting Other Functions

Other functions can be set as follows.

Setting Items

(1) trEnd (Printing cycle)

Selects a printing cycle from 10, 20, 30, and 60 seconds.

(2) ZonE (Zone recording)

The data for each channel can be recorded separately in another area so as not to overlap.

(3) PArt (Partial compression/expansion)

Records the measured data of the channel, partially compressed or expanded.

(4) Print (Digital printing)

Specify ON or OFF whether the measured data for each channel is printed or not.

(5) tAG (Tag)

Sets the tag, which is to be printed instead of a channel number, for logging printing or manual printing.

For tag setting, up to 7 characters can be used (select from Character code table on page 59) for each channel.

(6) Cmnt (Comments)

Sets the comments to be printed by DI function (Option: RE6).

There are 3 kinds of comments, and settings of up to 16 characters (select from Character code table on page 59) for each DI are possible.

Operation

Setting	Mode	
AUTO	trEnd	Printing Cycle
	ZonE	Zone Recording
	PArt	Partial Compression/Expansion
	Print	Digital Printing
	tAG	Tag
	Cmnt	Comments

(1) trEnd (Printing Cycle)

Example: Setting the printing cycle to 60 seconds.

Display	Operation keys	Description
AUTO	ESC MENU 3 sec; △ PRINT; ENT	Press the “MENU” key for 3 seconds or longer to enter setup mode. Use the △ key to display "AUTO", and press the “ENT” key.
trEnd	△ PRINT; ENT	Use the △ key to display "trEnd", and press the “ENT” key.
60	△ PRINT; ENT	Use the △ key to select the printing cycle "60", and press the “ENT” key.
-SEt-	ENT	Press the “ENT” key. Setting is completed. To return to user mode, press the “MENU” key for 3 seconds or longer.

(2) ZonE (Zone Recording)

Example: Setting the instrument so that Channel 1 zero/span will be recorded at the position of 20 to 50 %.

Display	Operation keys	Description
AUTO	ESC MENU 3 sec; △ PRINT; ENT	Press the “MENU” key for 3 seconds or longer to enter setup mode. Use the △ key to display "AUTO", and press the “ENT” key.
ZonE	△ PRINT; ENT	Use the △ key to display "ZonE", and press the “ENT” key.
Ch 1	△ PRINT; ENT	Use the △ key to select the desired channel, and press the “ENT” key.
L 020 (Setting of Left-end position)	△ PRINT; ▷ FEED; ENT	Set a zero point printing position in percentage (%). Use the △ key to select a numeral, and use the ▷ key to shift a digit. Press the “ENT” key.
r 050 (Setting of Right-end position)	△ PRINT; ▷ FEED; ENT	Set the span point printing position in percentage (%). Use the same process as the zero point printing position setting.
-SEt-	ENT	Press the “ENT” key. Setting is completed. To return to user mode, hold down the “MENU” key for 3 seconds or longer.

[Note]

If an incorrect numeral is entered, E Err21 or E Err26 is displayed.

Press the “ENT” key and re-enter a correct numeral.

(3) PArt (Partial Compression/Expansion)

Example: Setting Channel 1 scale of 0 to 1000.0℃ to 500.0℃ at a boundary point of 30%.

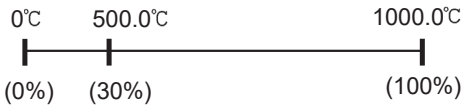

Display	Operation keys	Description
AUTO	ESC MENU 3 sec △ PRINT ENT	Press the “MENU” key for 3 seconds or longer to enter setup mode. Use the △ key to display "AUTO", and press the “ENT” key.
PArt	△ PRINT ENT	Use the △ key to select "PArt", and press the “ENT” key.
Ch 1	△ PRINT ENT	Use the △ key to select the desired channel, and press the “ENT” key.
on	△ PRINT ENT	Use the △ key to select "on", and press the “ENT” key.
030	△ PRINT ▷ FEED ENT	Set a boundary point position in percentage (%). Use the △ key to select a numeral, and use the ▷ key to shift a digit. Press the “ENT” key.
0500.0	△ PRINT ▷ FEED ENT	Set a boundary point position to "0500.0". Use the △ key to select a numeral, and use the ▷ key to shift a digit. Press the “ENT” key.
-SEt-	ENT	Press the “ENT” key. Setting is completed. To return to user mode, press the “MENU” key for 3 seconds or longer.

[Note]

If an incorrect numeral is entered, E Err21 is displayed.
Press the “ENT” key and re-enter a correct numeral.

(4) Print (Digital Printing)

Example: Setting logging channel data printing to "ON" (printing enabled) for all channels.

Display	Operation keys	Description
AUTO	ESC MENU 3 sec △ PRINT ENT	Press the “MENU” key for 3 seconds or longer to enter setup mode. Use the △ key to display "AUTO", and press the “ENT” key.
Print	△ PRINT ENT	Use the △ key to display "Print", and press the “ENT” key.
Ch 1	△ PRINT ENT	Use the △ key to select the desired channel, and press the “ENT” key.
on	△ PRINT ENT	Use the △ key to switch from "oFF" to "on", and press the “ENT” key.
-SEt-	ENT	Press the “ENT” key. Setting is completed. To return to user mode, press the “MENU” key for 3 seconds or longer.
Ch2	△ PRINT ENT	Repeat the setting for other channels.
⋮		
Ch6	△ PRINT ENT	
-SEt-	ENT	

[Note]

When the channel for which skip is selected during the range setting is set to ON, "*" is printed.

(5) tAG (Tag)

Example: Setting "ABCD" for Channel 1.

Display	Operation keys	Description
AUTO	ESC MENU 3 sec △ PRINT ENT	Press the “MENU” key for 3 seconds or longer to enter setup mode. Use the △ key to display "AUTO", and press the “ENT” key.
tAG	△ PRINT ENT	Use the △ key to display "tAG", and press the “ENT” key.
Ch 1	△ PRINT ENT	Use the △ key to select the desired channel, and press the “ENT” key.
1 Cd 41 (Setting of 1st Character)	△ PRINT ▷ FEED ENT	Set "41" as the 1st character. Use the △ key to select a code, and use the ▷ key to shift a digit. Press the “ENT” key.
2 Cd 42 (Setting of 2nd Character)	△ PRINT ▷ FEED ENT	Set the 2nd to 4th characters in the same manner.
3 Cd 43 (Setting of 3rd Character)	△ PRINT ▷ FEED ENT	
4 Cd 44 (Setting of 4th Character)	△ PRINT ▷ FEED ENT	
5 Cd 00 (Setting of 5th Character)	△ PRINT ▷ FEED ENT	Set "00" as the 5th character and press the “ENT” key.
-SEt-	ENT	Press the “ENT” key. Setting is completed. To return to user mode, press the “MENU” key for 3 seconds or longer.

[Note]

When the number of tag characters is less than 7, add "00" code next to the last character.

See page 59 for Character code table.

(6) CMNT (Comments)

Example: Setting "ON" for Comment 1 (CMT 1).

Display	Operation keys	Description
AUTO	ESC MENU 3 sec	Press the “MENU” key for 3 seconds or longer to enter setup mode. Use the △ key to display "AUTO", and press the “ENT” key.
CMNT	PRINT ENT	Use the △ key to display "CMNT", and press the “ENT” key.
CMT 1	PRINT ENT	Use the △ key to select a comment number. Display "CMT 1" and press the “ENT” key.
1 CD 4F (Setting of the 1st Character)	PRINT FEED ENT	Set "4F" as the 1st character. Use the △ key to select a code, and use the ▷ key to shift a digit. Press the “ENT” key.
2 CD 4E (Setting of the 2nd Character)	PRINT FEED ENT	Set "4E" as the 2nd character. Operate in the same manner as the 1st character setting.
3 CD 00 (Setting of the 3rd Character)	PRINT FEED ENT	Set "00" as the 3rd character. Operate in the same manner as setting the 1st character.
9 (Setting of the 9th Character) A (Setting of the 10th Character) B (Setting of the 11th Character) G (Setting of the 16th Character)		Repeat the settings up to the 16th Characters.
-SET-	ENT	Press the “ENT” key. Setting is completed. To return to user mode, press the “MENU” key for 3 seconds or longer.

[Note]

- When the number of tag characters is less than 16, add "00" code next to the last character.
  See page 59 for Character code table.
- When DI (option: RE6) is not ordered, comment printing does not function.
  Do not set the comment setting.

7.2 Setting Engineering Mode

⚠ WARNING

When calibrating data, connect the equipment as written in Section 9.5 of the instruction manual. Data calibration must be performed correctly.
Operators possessing knowledge of electricity and control related matters should perform the calibration after careful reading the Sections 7.2 and 9.5 of the instruction manual.
(Shinko Technos Co., Ltd. is not liable for any damages incurred if calibration is performed other than described in the instruction manual.)

Key Operation to Enter Engineering Mode

Press the “MENU” key for 3 seconds or longer to enter setup mode.
Use the △ key to select "EnG", and press the “ENT” key to display "0000".
Use the △ key to alter a numeral, and the ▷ key to shift a digit. Enter the password "2222", then press the “ENT” key. "rESEt" will be flashing.
Press the “ENT” key. After reset, the unit enters engineering mode.

The following shows a display map of the Engineering mode. Use the △ key to operate.

• 7.2.1 Alarm Hysteresis

Setting	ON/OFF	
ALAHS	on oFF	Sets the hysteresis width. Cancels the hysteresis width.

• 7.2.2 Burnout ON/OFF

Setting	Channel	ON/OFF	
boUt	Ch1 Ch2 Ch3 Ch4 Ch5 Ch6	on oFF	Sets burnout. Cancels burnout.

• 7.2.3 Channel Offset

Setting	Channel	OFFSET	
oFSEt	Ch1 Ch2 Ch3 Ch4 Ch5 Ch6	0.0000	Enters an offset value.

• 7.2.4 Reference Junction Compensation

Setting	Channel	Function	
rJC	Ch1 Ch2 Ch3 Ch4 Ch5 Ch6	Int Ellt Ch	Internal Compensation External Compensation External Channel Input Compensation

• 7.2.5 Changing the Printing Color

Setting	Channel	COLOR	
CoLor	Ch 1	PrP	Purple
	Ch2	rEd	Red
	Ch3	Grn	Green
	Ch4	bLU	Blue
	Ch5	brn	Brown
	Ch6	bLt	Black

• 7.2.6 Settings Related to Recording

Setting	Function	
rUn	rUntG	Recording start/stop INT/EXT selection
	tAG	Channel/tag printing selection
	ALArn	Alarm printing ON/OFF
	dGtPr	Logging printing ON/OFF
	SCALE	Scale printing ON/OFF
	rUnPr	Recording Start/Stop printing (OFF/Synchronous/Asynchronous)

• 7.2.7 Setting the Communication Function

Setting	
Con	Setting the Communication Function Protocol Local address Communication speed Data length Parity bit

• 7.2.8 Initializing the Setup Data and Calibration Data

Setting	YES/NO	
Init	YES	Data in Setup mode is initialized.
	no CAL	Calibration data returns to the default value.

• 7.2.9 DI Functions

Setting	DI No.	Function	
dI	dI 1	oFF	No function
	dI 2	rCd	RUN/STOP trigger
	dI 3	SPEEd	Chart feed speed selection
		Cmnt 1	Comment 1 printing (Synchronous)
		Cmnt2	Comment 2 printing (Synchronous)
		Cmnt3	Comment 3 printing (Synchronous)
		nAn-P	Manual printing (Synchronous)
		tIn-P	Date and time printing (Synchronous)
		ACmt 1	Comment 1 printing (Asynchronous)
		ACmt2	Comment 2 printing (Asynchronous)
		ACmt3	Comment 3 printing (Asynchronous)
		AnAnP	Manual printing (Asynchronous)
		AtIMP	Date and time printing (Asynchronous)

• 7.2.10 Temperature Unit selection

Setting	Temp Unit	
tEMP	C	Centigrade Unit
	F	Fahrenheit Unit

• 7.2.11 Point Calibration

Setting	Function	
P Adj	ZEro	Zero point calibration
	FULL	Span point calibration
	HYS	Hysteresis at left/right move (Factory adjustment item)
	CoLor	Ribbon select calibration (Factory adjustment item)

• 7.2.12 Data Calibration

Setting	Function	
d Adj	VoLt	Voltage calibration
	rtd	RTD (Resistance temperature detector) calibration
	rJC	Internal reference junction compensation calibration

• 7.3 Terminating the Engineering Mode

Setting	Function	
End	StorE	Saves the set value
	Abort	Cancels the set value

[Note]

Upon termination the Engineering mode, if "End" is selected and the power was turned off without selecting "StorE", the setting will become invalid.

For "End" operation, see Section 7.3 on p.85.

Table 7.2 Default value of the engineering mode

Setting items	Default value	Remarks
Alarm hysteresis	ON (0.5%)	
Burnout (all channels)	OFF	
Channel offset (all channels)	0.0	
RJC (all channels)	Internal compensation INT	
Dot printing color (Ch1 to Ch6)	Purple(1), Red(2), Green(3), Blue(4), Brown(5), Black(6)	
REC (recording): RUN/STOP trigger Channel/Tag printing Alarm printing Logging printing Logging printing interval Logging printing reference time Logging scale printing Logging printing Sync/Async Recording Start/Stop printing	 INT Ch OFF ON 6H 00:00 OFF Sync (Synchronous) OFF	Use the “REC” key
COM (communication): Protocol Address Communication speed Data length Parity bit Stop bit	 Original 01 9600 8 bits None 1 bit	
DI function (Ch1 to Ch3)	OFF	
Temperature unit	C (centigrade unit)	

7.2.1 Alarm Hysteresis

0.5 % hysteresis can be set as a value upon alarm activation and alarm recovery. (Common to all alarms)

Example: Turning alarm hysteresis OFF.

Display	Operation keys	Description
ALAHS	ENT △ PRINT ENT	Enter engineering mode (See the key operation on page 67). Use the △ key to display "ALAHS", and press the “ENT” key.
oFF	△ PRINT ENT	Use the △ key to display "oFF", and press the “ENT” key.

7.2.2 Burnout ON/OFF

Burnout High for each channel (to deflect the recording over the span) can be set.

Example: Setting Burnout High for Channel 4.

Display	Operation keys	Description
boUt	ENT △ PRINT ENT	Enter engineering mode (See the key operation on page 69). Use the △ key to display "boUt", and press the “ENT” key.
Ch4	△ PRINT ENT	Use the △ key to display "Ch4", and press the “ENT” key.
on	△ PRINT ENT	Use the △ key to select "on", and press the “ENT” key.

7.2.3 Channel Offset

For channel offset setting, set the value to be added to an actual process variable.

Input value can be set from -19999 to 99999.

Example: Adding the value (3.0) to Channel 3.

Display	Operation keys	Description
oFSEt	ENT △ PRINT ENT	Enter engineering mode (See the key operation on page 69). Use the △ key to display "oFSEt", and press the “ENT” key.
Ch3	△ PRINT ENT	Use the △ key to select "Ch3", and press the “ENT” key.
3.0000	△ PRINT ▷ FEED ENT	Use the △ key to alter a sign/numerical value or shift a decimal point. Use the ▷ key to shift a digit. Once the numerical value is determined, press the “ENT” key.

7.2.4 Reference Junction Compensation

The following describes how to compensate an electromotive force generated between a thermocouple wire or compensation lead wire and a terminal. There are 3 compensating methods as follows:

- A method of compensation using the built-in temperature sensing element (INT: Internal compensation)
- A method of compensation by keeping an external compensator's temperature constant (EXT: External compensation). For external reference junction compensation voltage, -19999 to 19999 μV can be set as an input.
- By connecting the terminal of the external junction box to one input of the recorder, compensates the input of other channels. (CH: Channel input compensation)

For this recorder, Internal compensation (INT) default value has been set.

Example: Setting the external compensator's temperature constant voltage for Ch6 to 391 μV.
(Thermocouple T input, external compensator's compensating temperature 10℃,
Electromotive force input 391 μV)

Display	Operation keys	Description
rJC	ENT	Enter engineering mode (See the key operation on page 69). Use the △ key to display "rJC", and press the "ENT" key
Ch6	△ PRINT, ENT	Use the △ key to select "Ch6", and press the "ENT" key.
EnE	△ PRINT, ENT	Use the △ key to select "EnE", and press the "ENT" key.
00391	△ PRINT, ▷ FEED, ENT	Use the △ key to alter a numerical value, and the ▷ key to shift a digit. Once the numerical value is determined, press the "ENT" key.
Ch6		Once setting is completed, the recorder will return to Channel setting mode.

Example: When Channel 1 input compensates Channel 6 reference junction.

Display	Operation keys	Description
rJC	ENT	Enter engineering mode (See the key operation on page 69). Use the △ key to display "rJC", and press the "ENT" key.
Ch6	△ PRINT, ENT	Use the △ key to select "Ch6", and press the "ENT" key.
Ch	△ PRINT, ENT	Use the △ key to select "Ch", and press the "ENT" key.
Ch 1	△ PRINT, ENT	Use the △ key to select "Ch 1", and press the "ENT" key.
Ch6		Once setting is completed, the recorder will return to Channel setting screen.

7.2.5 Changing the Printing Color

Set a printing color for each channel.

Example: Setting black as a printing color.

Display	Operation keys	Description
CoLor	ENT / △ PRINT / ENT	Enter engineering mode (See the key operation on page 69). Use the △ key to display "CoLor", and press the “ENT” key.
Ch 1	△ PRINT / ENT	Use the △ key to select "Ch 1", and press the “ENT” key.
bLE	△ PRINT / ENT	Use the △ key to display "bLE", and press the “ENT” key.
CoLor	△ PRINT / ▷ FEED / ENT	Once setting is completed, the recorder will return to Printing Color Setting screen.

7.2.6 Settings Related to Recording

Recording RUN/STOP trigger, channel/tag printing, alarm printing, logging printing, scale printing ON/OFF and Recording start/stop printing can be set.

(1) Recording RUN/STOP Trigger setting

Recording RUN/STOP Trigger can be set by the “REC” key or by the DI.

Example: Setting Recording RUN/STOP Trigger by the DI.

Display	Operation keys	Description
rUn	ENT / △ PRINT / ENT	Enter engineering mode (See the key operation on page 69). Use the △ key to display "rUn", and press the “ENT” key.
rUntG	△ PRINT / ENT	Use the △ key to select "rUntG", and press the “ENT” key.
EIIt	△ PRINT / ENT	Use the △ key to display "EIIt", and press the “ENT” key.
rUntG	△ PRINT / ▷ FEED / ENT	Once setting is completed, the recorder will return to Recording RUN/STOP Setting screen.

[Note]

Default value: Int (REC key)

If Recording Start/Stop is set to “EIIt (EXT)” as in the example above, select “RUN/STOP trigger rCd (RCD)” as the DI function. See pages 79, 80 for the DI function.

If "EIIt" is selected, the “REC” key will not function.

(2) Channel/Tag printing Selection

In the case of logging printing or manual printing, this sets either a tag printing or a channel printing.

Example: Setting the tag printing.

Display	Operation keys	Description
rUn	ENT	Enter engineering mode (See the key operation on page 69). Use the △ key to display "rUn", and press the "ENT" key.
tAG	△ PRINT, ENT	Use the △ key to select "tAG", and press the "ENT" key.
tAG	△ PRINT, ENT	Use the △ key to display "tAG", and press the "ENT" key.
tAG		Once setting is completed, the recorder will return to Channel/Tag Setting screen.

(3) Alarm printing ON/OFF

Sets the alarm printing ON/OFF.

ON1: Prints the alarm occurring and alarm recovering.

ON2: Prints only the alarm occurring.

Example: When setting both alarm occurring and alarm recovering printings.

Display	Operation keys	Description
rUn	ENT	Enter engineering mode (See the key operation on page 69). Use the △ key to display "rUn", and press the "ENT" key.
ALArn	△ PRINT, ENT	Use the △ key to select "ALArn", and press the "ENT" key.
on 1	△ PRINT, ENT	Use the △ key to display "on 1", and press the "ENT" key.
ALArn		Once setting is completed, the recorder will return to the Alarm Printing Setting screen.

(4) Logging Printing ON/OFF

Sets the logging printing ON/OFF. In the case of logging printing ON, this sets the printing start time, printing interval and Synchronous/Asynchronous.

Setting	ON/OFF	Printing Start time	Interval	Sync/ASync
dGtPr	on	00:00	10Min	SYnC
	oFF		15Min	ASYnC
			20Min	
			30Min	
			1H	
			2H	
			3H	
			4H	
			6H	
			8H	
			12H	
			24H	

Example: When setting the logging printing Synchronous (synchronizing with the analog recording) to start at 18:00 every day.

Display	Operation keys	Description
rUn	ENT / △ PRINT / ENT	Enter engineering mode (See the key operation on page 69). Use the △ key to display "rUn", and press the "ENT" key.
dGtPr	△ PRINT / ENT	Use the △ key to select "dGtPr", and press the "ENT" key.
on	△ PRINT / ENT	Use the △ key to display "on", and press the "ENT" key.
18:00 (Print Start Time)	△ PRINT / ▷ FEED / ENT	Use the △ key to alter a numeral, and ▷ key to shift a digit. Then, set the time and press the "ENT" key.
24H (Interval)	△ PRINT / ENT	Use the △ key to display "24H", and press the "ENT" key. (Select from 10 min, 15 min, 20 min, 30 min, 1H, 2H, 3H, 4H, 6H, 8H, 12H and 24H)
SYnC (Synchronous/Asynchronous)	△ PRINT / ENT	Select SYnC with the △ key, and press the "ENT" key. SYnC: Synchronous ASYnC: Asynchronous
dGtPr		Once setting is completed, the recorder will return to Logging Printing Setting screen.

(5) Scale Printing ON/OFF

Set scale printing to ON/OFF.

Example: Setting the Scale printing to OFF.

Display	Operation keys	Description
rUn	ENT △ PRINT ENT	Enter engineering mode (See the key operation on page 69). Use the △ key to display "rUn", and press the "ENT" key.
SCALE	△ PRINT ENT	Use the △ key to select "SCALE", and press the "ENT" key.
oFF	△ PRINT ENT	Use the △ key to display "oFF", and press the "ENT" key.
SCALE		Once setting is completed, the recorder will return to Scale Printing Setting screen.

(6) Recording Start/Stop Printing (OFF/Synchronous/Asynchronous)

Prints recording start and stop time on the chart paper.

For Recording Start/Stop printing, OFF, Synchronous or Asynchronous can be selected.

Example: Recording Start is printed with the chart feed speed (Synchronous printing)

Display	Operation keys	Description
rUn	ENT △ PRINT ENT	Enter engineering mode (See the key operation on page 69). Use the △ key to display "rUn", and press the "ENT" key.
rUnPr	△ PRINT ENT	Use the △ key to select "rUnPr", and press the "ENT" key.
SYnC	△ PRINT ENT	Use the △ key to display "SYnC", and press the "ENT" key.
rUnPr		Once setting is completed, the recorder will return to Recording Start/Stop Printing Setting screen.

Selection item:

oFF (Recording Start/Stop OFF): Recording Start/Stop is not printed.

SYnC (Recording Start/Stop Synchronous printing):

Recording Start is printed at preset chart speed. However, Recording Stop can be printed regardless of the preset Chart feed speed.

ASYnC (Recording Start/Stop Asynchronous printing):

Recording Start/Stop is printed regardless of the preset Chart feed speed.

How to print Recording Start:

Press the "REC" key after recording stops. Recording Start time will be printed automatically. It will not be printed if "Recording Start/Stop OFF" has been set.

How to print Recording Stop:

Stop recording by pressing the "REC" key for more than 3 sec.

Recording Stop time will be printed automatically.

It will not be printed if "Recording Start/Stop OFF" has been set.

DI function:

If DI function is used for Recording RUN/STOP, Recording Start/Stop cannot be performed with the REC key. Perform Recording RUN/STOP using external DI terminals.

Printing sample:

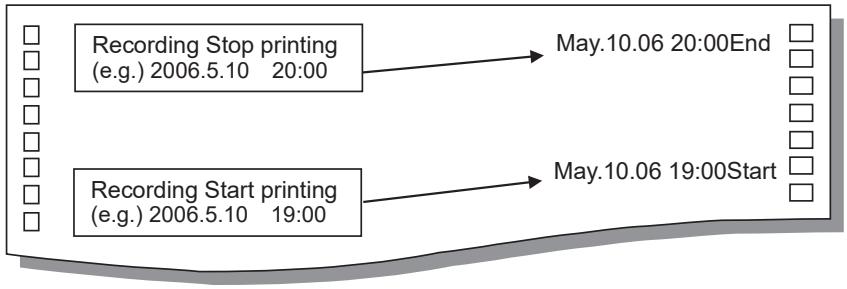

7.2.7 Setting the Communication Function

Sets Protocol, Local Address, Communication Speed, Data Length, Parity Bit, and Stop Bit.
Example: Original Protocol, Local Address: 02, Communication Speed: 1200 bps, Data Length: 7 bits, Parity Bit: Even, Stop Bit: 2 bits.

	Display	Operation keys	Description
	CoM	ENT	Enter engineering mode (See the key operation on page 69). Use the △ key to display "CoM", and press the "ENT" key.
P	orGPr	△ PRINT ENT	Use the △ key to display "orGPr", and press the "ENT" key. (Select either Original or MODBUS RTU.)
	(Protocol)		
A	Adr02	△ PRINT ENT	Use the △ key to display "Adr02", and press the "ENT" key. (Select from Adr01 to Adr32)
	(Local address)		
b	1200	△ PRINT ENT	Use the △ key to display "1200", and press the "ENT" key. (Select from 1200, 2400, 4800, 9600, 19200, 38400.)
	(Communication speed)		
d	7bit	△ PRINT ENT	Use the △ key to display "7bit", and press the "ENT" key. (Select 7 bits or 8 bits)
	(Data length)		
P	EVEn	△ PRINT ENT	Use the △ key to display "EVEn", and press the "ENT" key. (Select from EVEN, ODD and NONE)
	(Parity bit)		
S	2bit	△ PRINT ENT	Use the △ key to display "2bit", and press the "ENT" key. (Select 1 bit or 2 bits)
	(Stop bit)		
	CoM		Once setting is completed, the recorder will return to Communication Function Setting screen.

7.2.8 Initializing the Setup Data and Calibration Data

If "YES" is selected, all setup mode data will revert to the default value.
If "CAL" is selected, calibration data will revert to the default value. Since this function initializes all setup data and calibration data, take care when executing this function.
Example: Initializing the Setup Data.

Display	Operation keys	Description
Init	ENT	Enter engineering mode (See the key operation on page 69). Use the △ key to display "Init", and press the "ENT" key.
YES	△ PRINT ENT	Use the △ key to select "YES", and press the "ENT" key.
Ini.oK		Initialization is completed.

7.2.9 DI Functions

Allocates functions to 3 DI terminals. There are 12 DI functions as follows.

No function	: oFF	
Manual printing (Sync.)	: MAn-P	(Positive edge: Printing starts)
Manual printing (Async.)	: AMAn.P	(Positive edge: Printing starts)
RUN/STOP trigger	: rCd	(ON: RUN, OFF: STOP)
Date/Time printing (Sync.)	: tI M-P	(Positive edge: Printing starts)
Date/Time printing (Async.)	: AtI M.P	(Positive edge: Printing starts)
Chart feed speed selection	: SPEEd	(ON: Spd-1, OFF: Spd-2)
Comment printing 1 to 3 (Sync.)	: Cmnt 1, Cmnt2, Cmnt3	(Positive edge: Printing starts)
Comment printing 1 to 3 (Async.):	ACmt 1, ACmt2, ACmt3	(Positive edge: Printing starts)

About DI function

By closing 3 DI terminals (D1, D2, D3) and the COM terminal, the following operations can be carried out.

Setting method

(1) Manual printing (Sync.) MAn-P (MAN-P)

Temporary channel value, date and time are printed on the chart paper.
Printing channel will be determined depending on whether the Digital printing function is turned ON or OFF in Setup mode.
Refer to Section “7.1.7 Setting other functions: (4) Digital printing”.
Preset Chart feed speed is used for printing.
Printing starts upon closing the DI terminals and the COM terminal (ON).

(2) Manual printing (Async.) AMAn.P (AMAN.P)

Temporary channel value, date and time are printed on the chart paper.
Printing channel will be determined depending on whether the Digital printing function is turned ON or OFF in Setup mode.
Refer to Section “7.1.7 Setting other functions: (4) Digital printing”.
Temporary channel value, date/time are printed regardless of the preset Chart feed speed.
During printing, measured value recording will not be performed.
Printing starts upon closing the DI terminals and the COM terminal (ON).

(3) RUN/STOP trigger rCd (RCD)

Recording RUN/STOP can be operated externally by DI terminals.
Recording starts upon closing the DI terminals and the COM terminal (ON).
Recording stops upon opening the DI terminals and the COM terminal (OFF).

(4) Date/Time printing (Sync.) tI M-P (TIM-P)

Current date and time are printed on the chart paper.
Preset Chart feed speed is used for printing.
Printing starts upon closing the DI terminals and the COM terminal (ON).

(5) Date/Time printing (Async.) AtI M.P (ATIM.P)

Current date and time are printed on the chart paper.
Date and time will be printed regardless of the preset Chart feed speed.
During printing, measured value recording will not be performed.
Printing starts upon closing the DI terminals and the COM terminal (ON).

(6) Chart feed speed selection SPEEd (SPEED)

Chart feed speed can be operated in 2 stages by DI terminals. Refer to Section “7.1.4 Setting the Chart feed speed”. The 1st chart feed speed can be selected by closing the DI terminals and the COM terminal (ON). The 2nd chart feed speed can be selected by opening the DI terminals and the COM terminal (OFF).

(7) Comment printing 1 to 3 (Sync.) CMnt 1, CMnt2, CMnt3 (CMNT 1 to 3)

The preset comments (comment 1, 2, 3) are printed on the chart paper.
Refer to Section “7.1.7 Setting other functions: (6) Comments”.
Comments are printed by the preset Chart feed speed.
Depending on the Chart feed speed, some comments may not be printed (e.g. where Chart feed speed is too slow.). Refer to Section “7.1.4 Setting the Chart feed speed”.
Printing starts upon closing the DI terminals and the COM terminal (ON).
It is possible to print up to 16 characters for Dot printing type, and up to 12 characters for Pen writing type.

(8) Comment printing 1 to 3 (Async.) ACMt 1, ACMt2, ACMt3 (ACMT 1 to 3)

The preset comments (comment 1, 2, 3) are printed on the chart paper.
Refer to Section “7.1.7 Setting other functions: (6) Comments”.
Comments are printed regardless of the preset Chart feed speed.
During printing, measured value recording will not be performed.
Printing starts upon closing the DI terminals and the COM terminal (ON).
It is possible to print up to 16 characters for Dot printing type, and up to 12 characters for Pen writing type.

Notes when operating Recording RUN/STOP

When operating Recording RUN/STOP externally using the DI function, select “(3) RUN/STOP trigger rCd (RCD)” of the DI function (p.79), and DI setting in engineering mode has to be set to EXt (EXT). [Refer to Section “7.2.6 Settings related to Recording (1) Recording RUN/STOP trigger setting” on page 74.]

For priority order and buffer action of Comment, Manual and Date/Time Printing, refer to Sections “6.3.3 Printing sample” and “6.4 Digital printing”.

Example: Setting Comment printing 3 for DI3

Display	Operation keys	Description
dI	ENT △ PRINT ENT	Enter engineering mode (See the key operation on page 69). Use the △ key to display "dI ", and press the “ENT” key.
dI 3	△ PRINT ENT	Use the △ key to select "dI 3", and press the “ENT” key.
CMnt3	△ PRINT ENT	Use the △ key to display "CMnt3", and press the “ENT” key.
dI 3		Once setting is completed, the recorder will return to the DI3 Function Setting screen.

[Note]

- Although DI synchronous does not print in STOP status, DI asynchronous does print in STOP status.
- Be sure to set to OFF if the DI function (Option: RE6) is not ordered. Do not set to any other setting except OFF.

7.2.10 Temperature Unit Selection

Sets the temperature unit.
Example: Setting the temperature unit to Fahrenheit (F).

Display	Operation keys	Description
tEMP	ENT	Enter engineering mode (See the key operation on page 69). Use the △ key to indicate "tEMP", and press the "ENT" key.
F	△ PRINT, ENT	Use the △ key to select "F", and press the "ENT" key.
tEMP		Once setting is completed, the recorder will return to the Temperature Unit Setting screen.

[Note]
If the temperature unit is changed, all setup data will revert to default values.

7.2.11 Point Calibration

Calibrates a dot printing position.
ZEro: Calibration of the zero point position
FULL: Calibration of the span point position

[Note]
Point calibration "HYS" and "CoLor" have been set before shipment. Do not change these values.

Example: Calibrating the zero point.

Display	Operation keys	Description
P AdJ	ENT	Enter engineering mode (See the key operation on page 69). Use the △ key to display "P AdJ", and press the "ENT" key.
ZEro	△ PRINT, ENT	Use the △ key to select "ZEro", and press the "ENT" key.
00003	△ PRINT, ▷ FEED, ENT	The instrument starts to feed and print the chart paper. With the △ (move left) and ▷ (move right), adjust the 0 mm position of the chart paper and the recording position. Press the "ENT" key. Display indicates the preset counter value.
ZEro		Once setting is completed, the recorder will return to the Zero Point Calibration screen.

Example: Calibrating the span point.

Display	Operation keys	Description
P AdJ	ENT △ PRINT ENT	Enter engineering mode (See the key operation on page 69). Use the △ key to display "P AdJ", and press the ”ENT” key.
FULL	△ PRINT ENT	Use the △ key to select "FULL", and press the “ENT” key.
5 01003	△ PRINT ▷ FEED ENT	The instrument starts to feed and print the chart paper. With the △ (move left) and ▷ (move right), adjust the 100 mm position of the chart paper and the recording position. Press the “ENT” key.
FULL		Display indicates the preset counter value. Once setting is completed, the recorder will return to the Span Point Calibration screen.

7.2.12 Data Calibration

Calibrates the voltage, RTD(resistance temperature detector), and reference junction compensation.
VoLt : Calibration of voltage
rtd : Calibration of RTD (resistance temperature detector)
rJC : Calibration of RJC (reference junction compensation)

[Note]

This recorder is carefully calibrated, however, if an indicated value is not normal, check the settings again.

Example: Calibrating the voltage at Channel 1.

Display	Operation keys	Description
d AdJ	ENT △ PRINT ENT	Enter engineering mode (See the key operation on page 69). Use the △ key to display "d AdJ", and press the “ENT” key.
VoLt	△ PRINT ENT	Use the △ key to select "VoLt", and press the “ENT” key. Select a channel to which equipment for calibration such as an mV generator is connected, and then, press the “ENT” key.
Ch 1	△ PRINT ENT	
00mV	ENT	Enter 0 mV. After 30 seconds, make sure that the ALM indicator is unlit and press the “ENT” key.
15mV	ENT	Enter 15 mV. After 10 seconds, make sure that the ALM indicator is unlit and press the “ENT” key.
25mV	ENT	Enter 25 mV. After 10 seconds, make sure that the ALM indicator is unlit and press the “ENT” key.
35mV	ENT	Enter 35 mV. After 10 seconds, make sure that the ALM indicator is unlit and press the “ENT” key.
55mV	ENT	Enter 55 mV. After 10 seconds, make sure that the ALM indicator is unlit and press the “ENT” key.
200mV	ENT	Enter 200 mV. After 10 seconds, make sure that the ALM indicator is unlit and press the “ENT” key.
1V	ENT	Enter 1 V. After 10 seconds, make sure that the ALM indicator is unlit and press the “ENT” key.
5V	ENT	Enter 5 V. After 10 seconds, make sure that the ALM indicator is unlit and press the “ENT” key.
10V	ENT	Enter 10 V. After 10 seconds, make sure that the ALM indicator is unlit and press the “ENT” key.
StorE	△ PRINT ENT	If the calibration is correct, select "StorE" with the △ key, and if incorrect, select "Abort" with the △ key. Then, press the “ENT” key.

[Note]

For calibration of voltage input, calibrate only one channel.

Example: When calibrating the RTD at Channel 2

Display	Operation keys	Description
d AdJ	ENT △ PRINT ENT	Enter engineering mode (See the key operation on page 69). Use the △ key to display "d AdJ", and press the “ENT” key.
rtd	△ PRINT ENT	Use the △ key to select "rtd", and press the “ENT” key.
r Ch2	△ PRINT ENT	Select a channel to which equipment for calibration such as a dial resistor is connected, and press the “ENT” key.
r r 100	ENT	Enter 100 Ω. After 10 seconds, make sure that the ALM indicator is unlit and press the “ENT” key.
r r 150	ENT	Enter 150 Ω. After 10 seconds, make sure that the ALM indicator is unlit and press the “ENT” key.
r r300	ENT	Enter 300 Ω. After 10 seconds, make sure that the ALM indicator is unlit and press the “ENT” key.
StorE	△ PRINT ENT	If the calibration is correct, select "StorE" with the △ key, and if incorrect, select "Abort" with the △ key. Then, press the “ENT” key.

[Note]

When calibrating RTD for a channel, short-circuit the other input terminals except the calibrating channel. RTD calibration is required for every channel.

[Note]

During calibration, the ALM indicator shows the following conditions.

(1) When the ALM indicator is unlit:
The calibration is within the range.

(2) When the ALM indicator is flashing:
The recorder is assessing the input value.

(3) When the ALM indicator is lit:
The calibration is out of the range.
Make sure that the connection is proper and input is correct.

: The indicator is unlit.
: The indicator is lit.

If calibration is performed out of the input range, calibration value out of the input range will be fixed, and Err 11 (Voltage) or Err 12 (RTD) will be displayed when the unit returns to measurement mode. At this time, return the calibration value to the default value using the function in Section 7.2.8 Initializing the Setup Data and Calibration Data.

Example: Setting the terminal temperature for Channel 1.

Display	Operation keys	Description
d AdJ	ENT △ PRINT ENT	Enter engineering mode (See the key operation on page 69). Use the △ key to display "d AdJ", and press the “ENT” key.
rJC	△ PRINT ENT	Use the △ key to select "rJC", and press the “ENT” key.
r Ch 1	△ PRINT ENT	Select a channel to be set, and press the “ENT” key. Measures and displays the current terminal temperature.
r 24.5	ENT	Press the “ENT” key, and the unit moves to temperature input display.
r 25.0	△ PRINT ▷ FEED ENT	Use the △ key to change a numeral, and ▷ key to shift a digit. Then, press the “ENT” key. See Section 9.5 (3) Calibration of Reference Junction Compensation.
StorE	△ PRINT ENT	If calibration is performed correctly, select "StorE" with the △ key, and if calibration is performed incorrectly, select "Abort" with the △ key. Then, press the “ENT” key.

[Note]

For terminal temperature calibration, select a channel from Ch1 to Ch3, and select another channel from Ch4 to Ch6. Calibrate these two channels separately.

7.3 Terminating the Engineering Mode

Example: The following describes how to save the setting data.

Display	Operation keys	Description
End	△ PRINT ENT	Use the △ key to display "End", and press the “ENT” key.
StorE	ENT	Use the △ key to select "StorE", and press the “ENT” key. The settings of the engineering mode have been saved. Recording starts under the new settings.

[Note]

When terminating Engineering mode, if "End" is selected and the power was turned off without selecting "StorE", the settings will become invalid.

Selecting "Abort" invalidates the settings, and starts recording under the previous settings.

8. COMMUNICATION

8.1 General Description

8.1.1 General Description of Functions

This Recorder has the following communication functions:

(1) Process variable output
Process variable, alarm status, etc.

(2) Setting value output
Reads the setup data such as a range and chart feed speed.

(3) Setting value input
Writes the setup data such as a range and chart feed speed.

(4) Controlling recorder via communication (Partial)
Printing start/stop, recording start/stop and switching display are possible via the communication function.

For functions (2) to (4), see the separate volume “Communication Command Manual”.
Settings in Engineering mode cannot be performed by the communication function.

8.1.2 Transmission Specifications

(1) Communication method:	Start-stop synchronization, Half-duplex communications
(2) Connection:	One-to-one (RS-232C), One-to-N (RS-485); N = 1 to 32
(3) Protocol:	Original protocol, MODBUS RTU
(4) Communication speed:	1200, 2400, 4800, 9600, 19200, 38400 bps (Selectable)
(5) Start bit:	1 bit
(6) Stop bit:	1, 2 bits (Selectable)
(7) Parity:	Even, Odd or None (Selectable)
(8) Data length:	7, 8 bits (MODBUS RTU: 8 bits fixed)

8.2 Original Protocol

8.2.1 Data Structure

(1) Character structure

In order to send 1 data (byte) in start-stop synchronization communication, the following data format is used.

Start Bit (1) + Data Bit (7 or 8) + Parity Bit (1) + Stop Bit (1 or 2)

(2) Data format

As communication data, multiple characters are sent by adding terminators to them.
Upon receiving these terminators, the recorder starts analyzing the communication data.

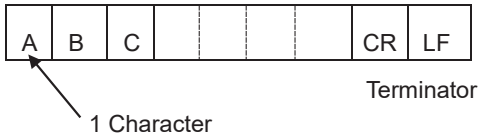

8.2.2 Opening/Closing the Link

To communicate with the recorder, a connection between the host computer and the recorder must be established. In the case of one-to-N communications, it is necessary to inform each recorder to which recorder the text is being sent. If a link open command is sent to multiple recorders through their sending function, all recorders which have received the command will send data. As a result, normal data cannot be received.

(1) Open Command

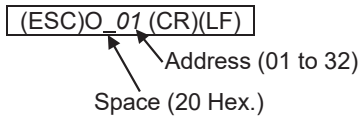

To communicate with the recorder, the host computer must issue this command and must memorize that it has issued this command.

(2) Close Command

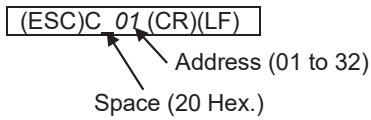

When sending data to the recorder to which the open command has not been issued, the host computer must issue this command to the reocrder to which the open command has been issued.

8.2.3 Outputting the Process Variable

(1) Specifying the Process Variable Output

TS*0*(CR)(LF)

Once this command is received, the recorder transfers the process variable to the transmission buffer when the (ESC) T command is received.

(2) Updating the Data

(ESC)T(CR)(LF)

Once this command is received, the recorder transfers the updated process variable to the transmission buffer.

(3) Specifying the Process Variable Output Order (At BINARY Mode Output)

BO*0*(CR)(LF) Outputs start from the upper byte.

BO*1*(CR)(LF) Outputs start from the lower byte.

The recorder outputs from the lower byte, unless otherwise specified.

(4) Outputting the Data

FM*0*, S_CH, E_CH (CR) (LF) Specifies the ASCII mode output.

FM*1*, S_CH, E_CH (CR) (LF) Specifies the BINARY mode output.

S_CH: Output start channel *01 to 06*
E_CH: Output end channel *01 to 06*

When the number of channel is 1, specify (S_CH) = (E_CH).
(e.g.) FM0, 01, 02(CR) (LF) ASCII, Ch1 to Ch6 output

(5) Process Variable Transmission Format (ASCII)

DATE (YY) (MM) (DD) (CR) (LF) Date

Year Month Day

TIME (HH) (MM) (SS) (CR) (LF) Time

Hour Minute Second

(DS*1*) (DS2) (ALM*1*) (ALM2) (ALM*3*) (ALM*4*) *(UNIT 1 to 6*) (CHNo.), (DATA) (CR) (LF)

① DS*1*: Data information 1 (1 byte)

N: Normal

D: Difference computation data

S: Sum computation data

M: Average computation data

R: Square root computation data

C: Decade computation data

S: Skip (All data: Space)

② DS2: Data information 2 (1 byte)

E: Final data

_(Space): Other data

③ ALM *1 to 4*: Alarm information (1 byte each, 4 bytes in total)

H: Upper limit alarm

L: Lower limit alarm

_(Space): Alarm OFF or alarm setting OFF

④ UNIT *1 to 6*: UNIT (6 bytes)

Returns the setting unit with codes. (When sending the 7-bit data, 1 bit information is omitted.)

⑤ CH No.: Channel number (2 bytes)

01 to 06

⑥ DATA: Process variable

Sign (1 byte): "+" or "–"

Data mantissa section (6 bytes): *00000 to 99999*

Data exponent section (4 bytes): E (Sign: 1 byte) (Multiplier: 2 bytes)

(Example) *+99999E – 02*

(6) Process Variable Transmission Format (BINARY)

Output bytes	Date and time	Process variable 1		Process variable 6

Output bytes (2 bytes): 5 x n (specified number of channels)+6

① Date and time (6 bytes):

1)	2)	3)	4)	5)	6)

1) Year: *00*H to *63*H (00H for the year 2000)

2) Month: *01*H to *0*CH

3) Day: *01*H to *1*FH

4) Hour: *00*H to *17*H (24-hour format)

5) Minute: *00*H to *3B*H

6) Second: *00*H to *3B*H

② Process variable (5 bytes):

CH No.	A*2*	A*1*	A*4*	A*3*	DATA*1*	DATA*2*

CH No. (1 byte): Channel number *01*H to *06*H

A1 to A4 (2 bytes): Alarm type activated at each alarm level

1: Upper limit alarm

2: Lower limit alarm

0: Alarm OFF or alarm setting OFF

(Example) Bit Sequence.

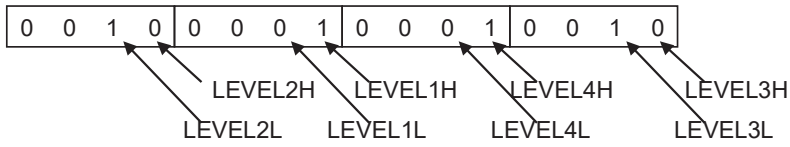

LEVELxH: Upper limit alarm bit at the alarm level x

LEVELxL: Lower limit alarm bit at the alarm level x

DATA*1*, DATA*2* (2 bytes): Process variable

-32000 to + *32000* (2-byte hexadecimal data)

The higher and lower bytes can be reversed by the BO command.

If Skip is specified, *8080*H will be output.

[Note]

- Output data over -32000 to +32000 constitutes overflow. The overflow 7E7EH is output on the plus side, and 8181H is output on the minus side (Excluding the Decade channel). Irrespective of the BO command, data output of the Decade channel is as follows.
- The upper byte outputs a mantissa (10 to 99). The lower byte outputs an exponent (-19 to 19). A decimal point position is fixed on the 1st digit after the decimal point.

8.2.4 Outputting the Unit and Decimal Point Position Data

(1) Specifying the Unit and Decimal Point Position Data Output

TS2(CR) (LF)

Once this command is received, the recorder transfers the unit and decimal point position data to the transmission buffer, when the (ESC) T command is received.

(2) Updating the Data

(ESC)T (CR) (LF)

Once this command is received, the recorder transfers the updated unit and decimal point position data to the transmission buffer

(3) Outputting the Data

LF, S_CH, E_CH (CR) (LF)

S_CH: Output starting channel *01 to 06*

E_CH: Output ending channel *01 to 06*

(e.g.) LF, 01, 06(CR) (LF) Unit and decimal point place data output for Ch1 to Ch6

When the number of channels is 1, specify (S_CH) = (E_CH).

(4) Data Format

(DS1)(DS2)(CHNo.) (UNIT1 to 6)(DP) (CR) (LF)

① DS*1* : Data information 1 (1 byte)

N : Normal

D : Difference computation data

S : Sum computation data

M : Average computation data

R : Square root computation data

C : Decade computation data

S : Skip (All data: Space)

② DS*2* : Data information 2 (1 byte)

E : Final data

_(Space) : Other data

③ CHNo.: Channel number (2 bytes); *01 to 06*

④ UNIT *1 to 6*: UNIT

Returns the set unit by codes.

(When sending the 7-bit data, 1 bit information is omitted.)

⑤ DP: Decimal point information (1 byte); *0 to 4*

[Note]

Depending on the range setting, the decimal point position may differ from that of the display screen.

8.2.5 Outputting the Status

If the open-link recorder has a data error on its link, it will save the error as a communication error in the internal status area. The (ESC S) command reads this status. Issuing the command clears an on-going error.

(1) Status Output Command

ESC S(CR) (LF)

Upon receiving this command, outputs will be the status of commands received so far.

(2) Status Output

E	R	X	X	CR	LF

XX: *00 to 19*

Table 8.2.5 Status output list

Status factor / Status output	Status factor		
	A/D END	Syntax error	Chart paper-empty
ER 00 C_RL_F			
ER 01 C_RL_F	O		
ER 02 C_RL_F		O	
ER 03 C_RL_F	O	O	
ER 04 C_RL_F			
ER 05 C_RL_F	O		
ER 16 C_RL_F			O
ER 17 C_RL_F	O		O
ER 18 C_RL_F		O	O
ER 19 C_RL_F	O	O	O

O: Factor by which the status is ENABLED.

A/D END: This occurs when AD conversion is completed.

Syntax error: This occurs during a communication error or a command error.

Chart paper-empty: This occurs when chart paper-empty is detected.
(When chart paper-empty option has been ordered.)

8.2.6 Data Reception Example

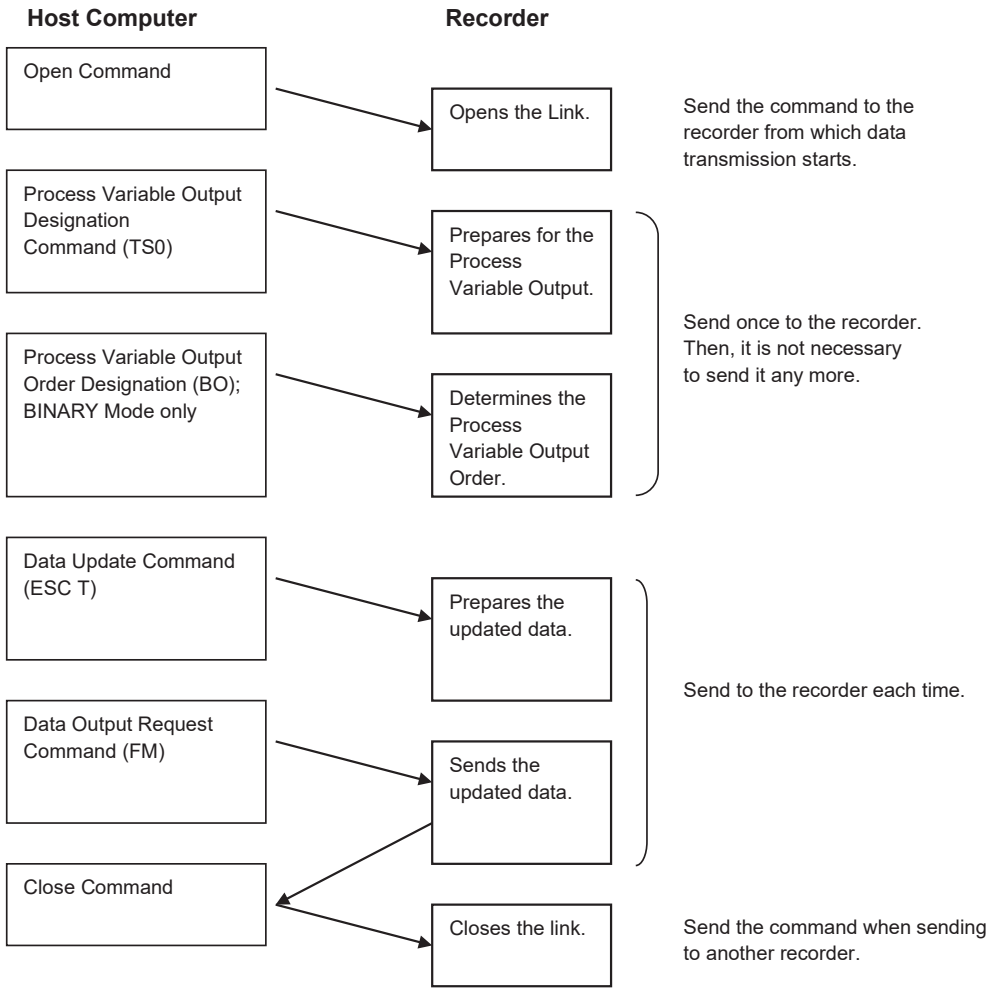

8.3 MODBUS RTU Protocol

The MODBUS protocol is a communication protocol developed for PLCs by Modicon Inc. (AEG Schneider Automation International S.A.S). It is described in the protocol specification (PI-MBUS-300 Rev. J). Refer to this document for information on the MODBUS protocol specification.

8.3.1 Data Structure

Slave address (1 byte)	Function code (1 byte)	Data (variable)	CRC (2 bytes)

8.3.2 Function Codes

The following function codes are available on this product:

Code	Function	Maximum data length	MODBUS-specific function (reference)
03H	Setting data read	123 words	Data read from holding register
04H	Input data read	123 words	Data read from input register
06H	One-time data write	1 word	Data write to holding register
10H	Continuous data writes	123 words	Data write to holding register

8.3.3 Error Response

In accordance with the communication protocol for the pertinent function code, if an error occurs during command transmission, an error response is returned in the fixed format described in this section.

■ Example of slave response (function code = 06H, command error = 10H)

Component	Data length	Data
Slave address (only for MODBUS RTU)	1	-
Function code + 80H	1	86H
Error code	1	10H
Error check (only for MODBUS RTU)	2	CRC
Total number of bytes	5	-

■ Error codes and their occurrence conditions

Error code	Description	Occurrence condition(s)
01H	Invalid function code	An unsupported function code is specified.
02H	Invalid register address	The relative address range exceeds "9999."
03H	Invalid number of registers	- The length of the accessed data is "0" or the sum of the relative address and data length exceeds the limit. - It is assumed that two or more function codes, each executable for one area, are involved. - Data longer than 2 words is specified for a one-time write command. - The data length exceeds 123 words.
04H	Device error	The received data is shorter than the predefined data length.
10H	Command error	An attempt at a write over an area exceeding the writable range.

8.3.4 Reading from the Input Register Area

The input register area is a read-only area. The current measured value and the current time are mapped. Specify the start address (relative) and data count (assuming that one word is two bytes) of the data to be read.

Function code: 04H

■ Example of master transmission (with a start address of 0032H and a data count of 2 words)

Component		Data length	Data
Slave address		1	–
Function code		1	04H
Data	Relative start address (high-order)	1	00H
	Relative start address (low-order)	1	32H
	Read data count (high-order)	1	00H
	Read data count (low-order)	1	02H
Error check		2	CRC (16 bits)
Total number of bytes		8	

■ Example of slave response (with a start address of 0032H and a data count of 2)

Component		Data length	Data
Slave address		1	–
Function code		1	04H
Data	Number of data bytes	1	04H
	Data 1 (high-order)	1	00H
	Data 1 (low-order)	1	09H
	Data 2 (high-order)	1	00H
	Data 2 (low-order)	1	0AH
Error check		2	CRC (16 bits)
Total number of bytes		9	

[Input Register Area Map] Function code: 04H

Address	Relative address (HEX)	Name	Arrange-ment	Description	Remarks
30001	0	Model type (1/8)	1	ASCII	Multipoint type："MULTI"
30002	1	Model type (2/8)	2		Pen type："PEN"
30003	2	Model type (3/8)	3		Subsequently blank
30004	3	Model type (4/8)	4		
30005	4	Model type (5/8)	5		
30006	5	Model type (6/8)	6		
30007	6	Model type (7/8)	7		
30008	7	Model type (8/8)	8		
30009	8	Software version (1/16)	1	ASCII	Version information on a system.
30010	9	Software version (2/16)	2		
30011	A	Software version (3/16)	3		
30012	B	Software version (4/16)	4		
30013	C	Software version (5/16)	5		
30014	D	Software version (6/16)	6		
30015	E	Software version (7/16)	7		
30016	F	Software version (8/16)	8		
30017	10	Software version (9/16)	9		
30018	11	Software version (10/16)	10		
30019	12	Software version (11/16)	11		
30020	13	Software version (12/16)	12		
30021	14	Software version (13/16)	13		
30022	15	Software version (14/16)	14		
30023	16	Software version (15/16)	15		
30024	17	Software version (16/16)	16		
30025	18	MODBUS map version	1	Binary	
30026	19	Reserve	1		
30027	1A	Reserve	2		
30028	1B	Reserve	3		
30029	1C	Reserve	4		
30030	1D	Reserve	5		
30031	1E	Reserve	6		
30032	1F	Reserve	7		
30033	20	Reserve	8		
30034	21	Reserve	9		
30035	22	Reserve	10		
30036	23	Reserve	1		
30037	24	Reserve	2		
30038	25	Reserve	3		
30039	26	Reserve			
30040	27	Reserve			
30041	28	Reserve			
30042	29	Reserve			
30043	2A	Reserve			
30044	2B	Reserve			
30045	2C	Reserve			
30046	2D	Reserve			
30047	2E	Reserve			
30048	2F	Reserve			
30049	30	Reserve			

Address	Relative address (HEX)	Name	Arrange-ment	Description	Remarks
30050	31	Reserve			
30051	32	Year		0 to 99	Every second update
30052	33	Month		1 to 12	
30053	34	Day		1 to 31	
30054	35	Hour		0 to 24	
30055	36	Minute		0 to 59	
30056	37	Second		0 to 59	
30057	38	Recording status		0 to 1	0 : Recording not in progress 1 : Recording in progress
30058	39	Chart sensor status		0 to 1	0 : With chart 1 : Without chart
30059	3A	Manual print status		0 to 1	0 : Print stops 1 : During printing
30060	3B	List print status		0 to 1	0 : Print stops 1 : During printing
30061	3C	Engineering list print status		0 to 1	0 : Print stops 1 : During printing
30062	3D	Reserve			
30100	63	Reserve			
30101	64	Channel status	CH01	00bit : Alarm 1 1= ON 0= OFF 01bit : Alarm 2 1= ON 0= OFF 02bit : Alarm 3 1= ON 0= OFF 03bit : Alarm 4 1= ON 0= OFF	
30102	65		CH02		
30103	66		CH03		
30104	67		CH04		
30105	68		CH05		
30106	69		CH06		
30107	6A	Measurement data(BIN)	CH01	-32000 to 32000	For data larger or smaller than ±32000, the minus side will be 8181H, and the plus side will be 7E7EH.
30108	6B		CH02		
30109	6C		CH03		
30110	6D		CH04		
30111	6E		CH05		
30112	6F		CH06		
30113	70	Decimal point	CH01	0 to 4	
30114	71		CH02		
30115	72		CH03		
30116	73		CH04		
30117	74		CH05		
30118	75		CH06		
30119	76	Measurement data (Float)	CH01	Float (high-order 2 byte) Float (low-order 2 byte)	
30120	77				
30121	78		CH02		
30122	79				
30123	7A		CH03		
30124	7B				
30125	7C		CH04		
30126	7D				
30127	7E		CH05		
30128	7F				
30129	80		CH06		
30130	81				

Address	Relative address (HEX)	Name	Arrangement	Description	Remarks
30131	82	Unit (1/4)	CH01		Current unit
30132	83	Unit (2/4)			
30133	84	Unit (3/4)			
30134	85	Unit (4/4)			
30135	86	Unit (1/4)	CH02		Current unit
30136	87	Unit (2/4)			
30137	88	Unit (3/4)			
30138	89	Unit (4/4)			
30139	8A	Unit (1/4)	CH03		Current unit
30140	8B	Unit (2/4)			
30141	8C	Unit (3/4)			
30142	8D	Unit (4/4)			
30143	8E	Unit (1/4)	CH04		Current unit
30144	8F	Unit (2/4)			
30145	90	Unit (3/4)			
30146	91	Unit (4/4)			
30147	92	Unit (1/4)	CH05		Current unit
30148	93	Unit (2/4)			
30149	94	Unit (3/4)			
30150	95	Unit (4/4)			
30151	96	Unit (1/4)	CH06		Current unit
30152	97	Unit (2/4)			
30153	98	Unit (3/4)			
30154	99	Unit (4/4)			
30155	9A	Reserve			
...	...				

8.3.5 Reading from or Writing to the Holding Register Area

The holding register area is a read-write area. Parameter settings and the start and stop command of the recording state are mapped. For read, specify the start address (relative) and data count (assuming that one word is two bytes) of the data to be read. For write, specify the start address and the data to be written.

For details, refer to the Communication Command Manual for the Hybrid Recorder HR-700.

9. MAINTENANCE

Check the following items in order to use this instrument effectively.

- Inspection
- Cleaning
- Replacing Consumables
- Adjusting Dot Printing Position
- Calibration

9.1 Inspection

Inspect the condition of operation periodically for effective use.

When any defect is found, see Chapter “10. Troubleshooting”.

■ Check whether trend recording is out of range.

■ Check whether the recording indication is off course.

• Check whether there are any large errors in indicated values or the dot printing position.

• Check whether there is improper dot printing.

• Check whether there are any blurred dot printings or printouts.

• Check whether printout is correct.

■ Check whether the chart paper has been fed properly.

• Check whether the chart paper is folded properly.

• Check whether the feed holes in the chart paper are torn off or broken.

• Check whether the chart feed speed is normal.

■ Check whether there are any abnormal sounds.

9.2 Cleaning

Many parts of this instrument are made of plastic. Use a dry cloth to wipe the parts clean.

[Note]
Never use any organic solvents.

9.3 Replacing Consumables

Replace consumables according to the following list.

No.	Name	Type	Period	Remarks	Quantity
1	Chart paper	H-10100	33 days	When chart feed speed is 20 mm/h	1
2	Ribbon cassette	WPSR188A000001A	3 months	When chart feed speed is 20 mm/h	1

[Note]

(1) Over time, ribbon colors will begin to fade. To ensure clear recording, replace the ribbon cassette as soon as possible.

(2) Use the ribbon cassette within one year after its purchase. Over time, ribbon colors will begin to fade.

9.4 Adjusting Dot Printing Position (Point Calibration)

The following describes how to adjust printing position on the chart paper.

It is advised to adjust recording position annually for accurate recording.

How to Adjust

Leave the recorder as it is, and adjust it according to the instructions in Section 7.2.11 Point Calibration. (p. 81, 82)

9.5 Calibration (Data Calibration)

Calibrate a process variable input every year in order to keep measurement accurate.

[Note]

Prior to calibration, allow warm-up for at least 30 minutes after switching the power ON.

Devices required for calibration

- Precision voltage (current) generator (Jointly use a digital voltmeter with accuracy of ±0.02% or less as required)
- Precision dial resistor

(1) Calibration of Voltage

Conduct calibration in the case of voltage, current or thermocouple input. For thermocouple input, calibrate reference junction compensation together.

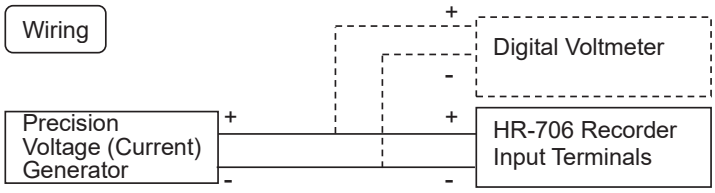

Calibrate the voltage according to the instructions in Section “7.2.12 Data Calibration” (Calibration of the voltage). (See pages 83-85.)

[Note]

(1) Calibrate at any one channel.

(2) When a shunt resistor is attached to the input terminal block for the current input, detach it prior to calibration.

(2) Calibration of RTD (Resistance temperature detector)

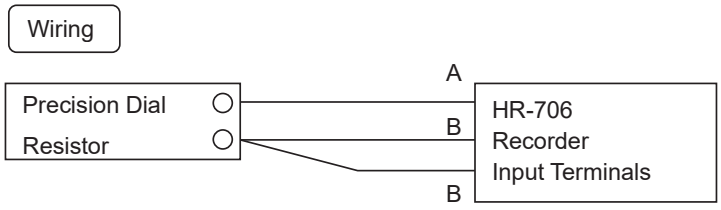

Calibrate RTD according to the instructions in Section “7.2.12 Data Calibration” (Calibration of the RTD). (See pages 83-85.)

[Note]

The dispersion of resistance for each wire must be 6 mΩ or less.

Calibrate RTD at every channel.

Short-circuit the input terminals except the calibrating channel.

(3) Calibration of Reference Junction Compensation

Calibrate the reference junction compensation in the case of thermocouple input.

Wiring

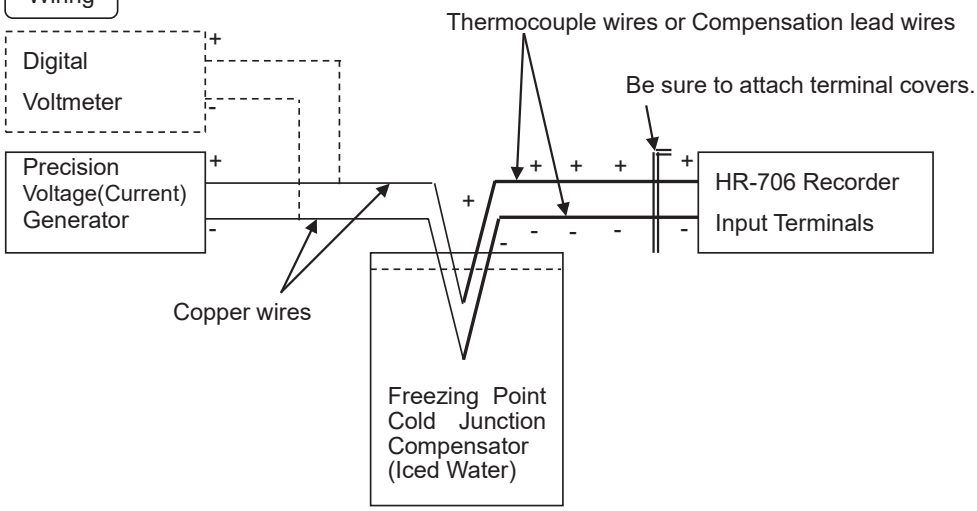

Calibration

(Example) Connecting the input to Channel 1, and setting the calibration when the thermocouple input value is -0.5℃ (input 0℃), and the measured RJC temperature is 24.5℃.

1) Check the Process variable when impressing 0.000 mV±2 μV to Channel 1 by the voltage generator beforehand. (In this example, it is -0.5℃.)
2) Check the terminal temperature of Channel 1 at the data calibration in engineering mode (Reference junction compensation). (In this example, it is 24.5℃.)
3) Add the difference (0.5℃) to the true value, then set as a correct RJC temperature. [24.5 – (–0.5)=25.0℃]

Calibrate RJC according to the instructions in Section 7.2.12 Data Calibration (Calibration of reference junction compensation). (See Section 7.2.12 Data Calibration on p.83.)

[Note]

(1) This calibration is conducted when compensation by the recorder's built-in temperature sensing element (INT: internal compensation) is selected as a reference junction compensation method.
(2) Wire Channel 1 and Channel 4 to calibrate.
(3) After wiring, attach the terminal covers and wait for 5 minutes or longer, then perform calibration.

10. TROUBLESHOOTING

10.1 Troubleshooting

10.1.1 Problems

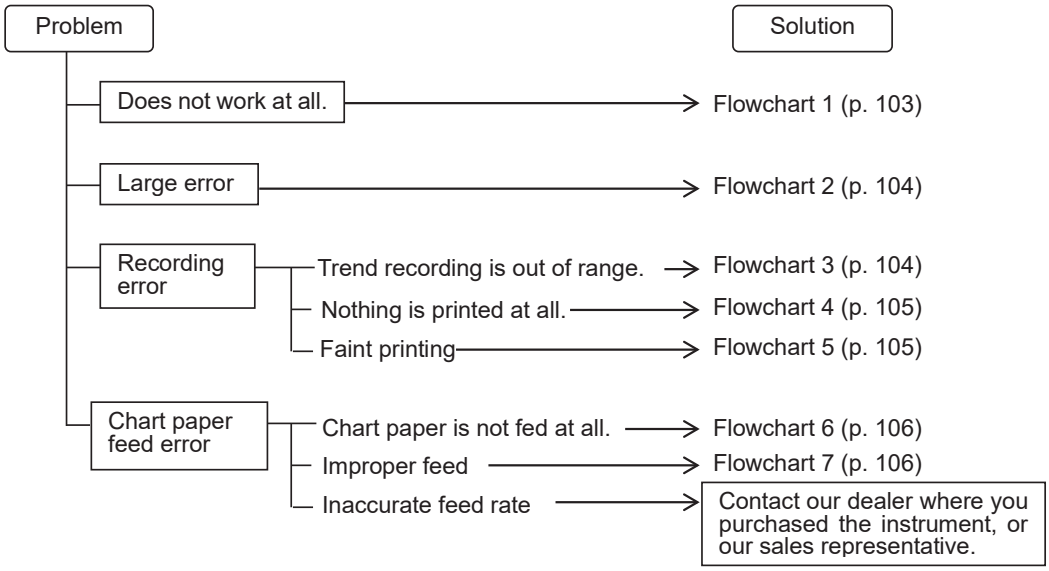

10.1.2 When the Recorder Does not Work at All

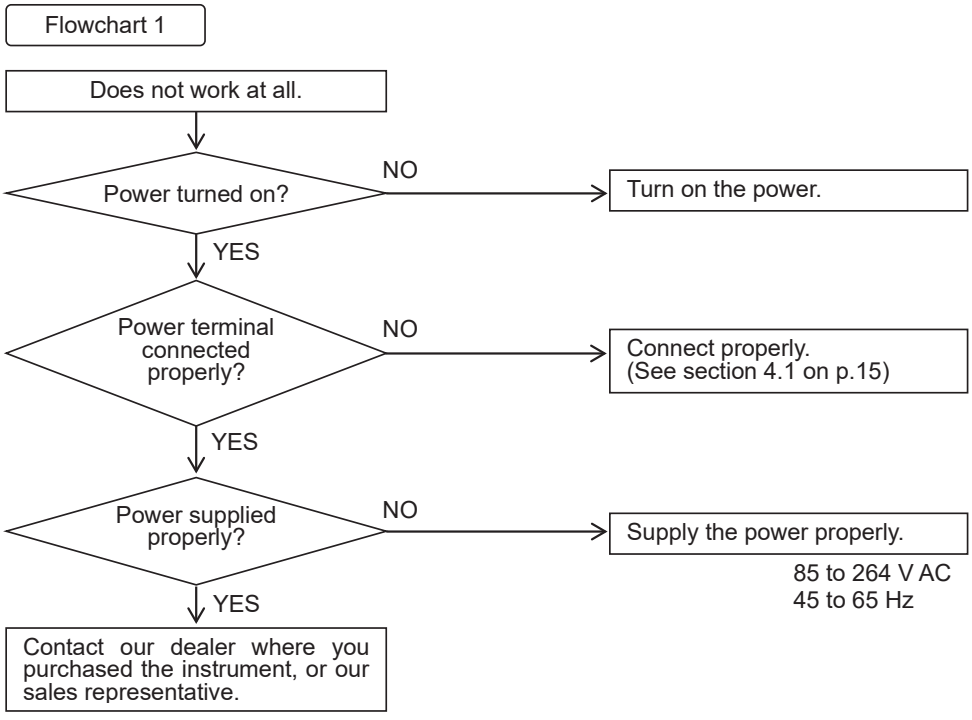

10.1.3 When there is a Large Error

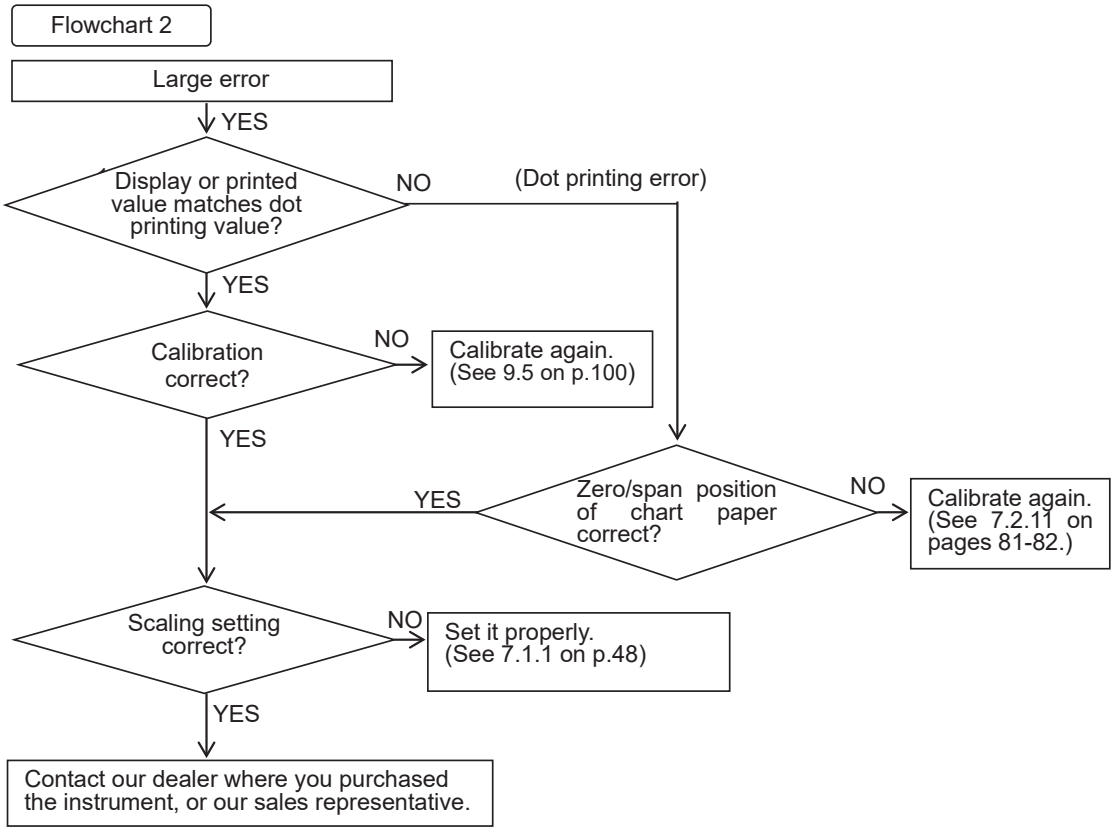

10.1.4 When the Trend Recording is Deflected

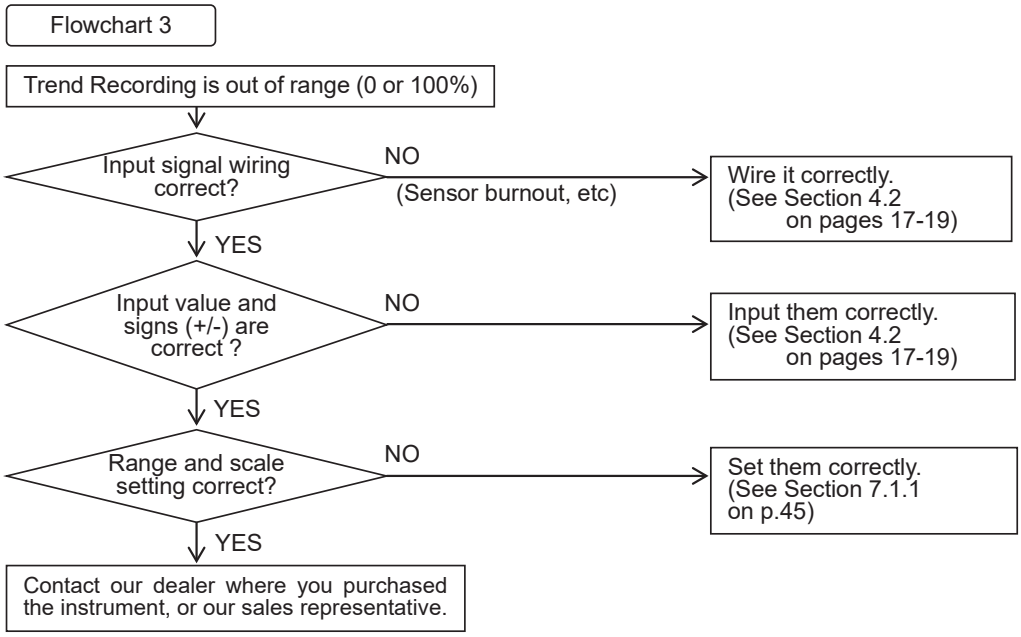

10.1.5 When Nothing is Recorded

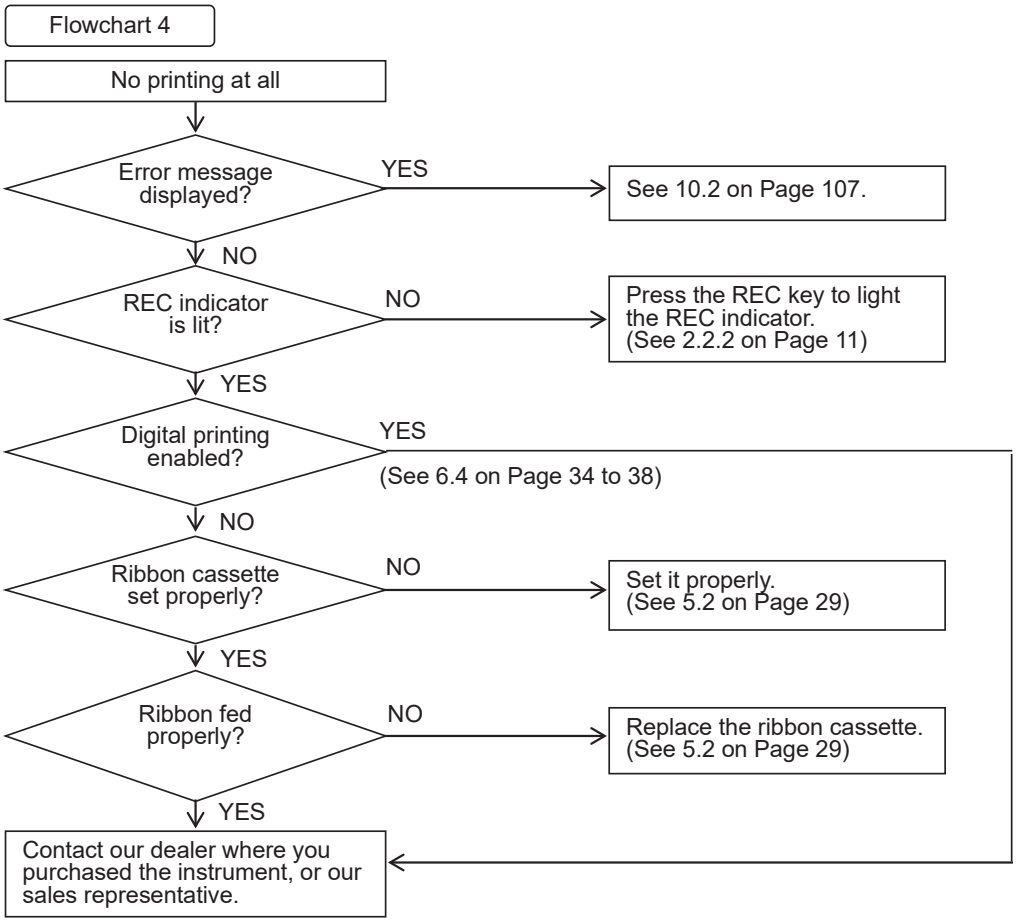

10.1.6 When Printing is Faint

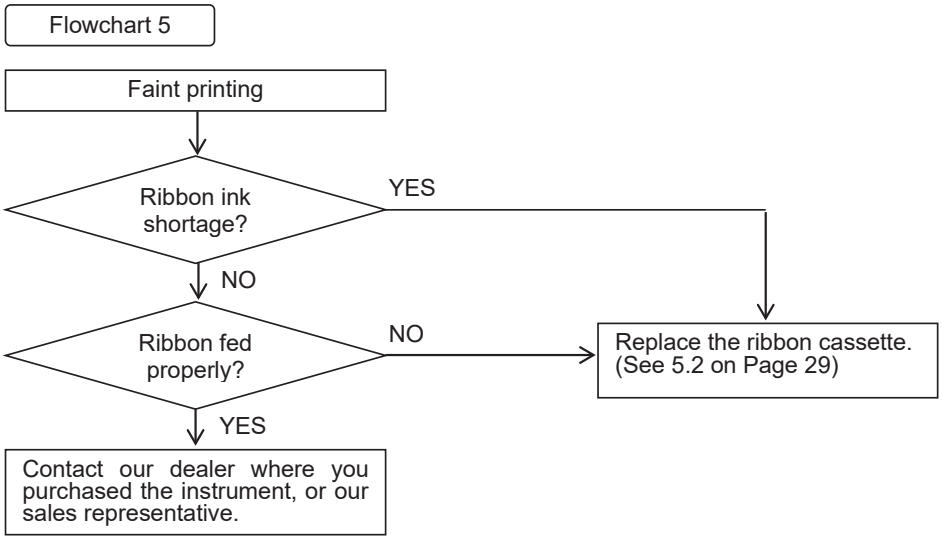

10.1.7 When the Chart Paper is not Fed at All

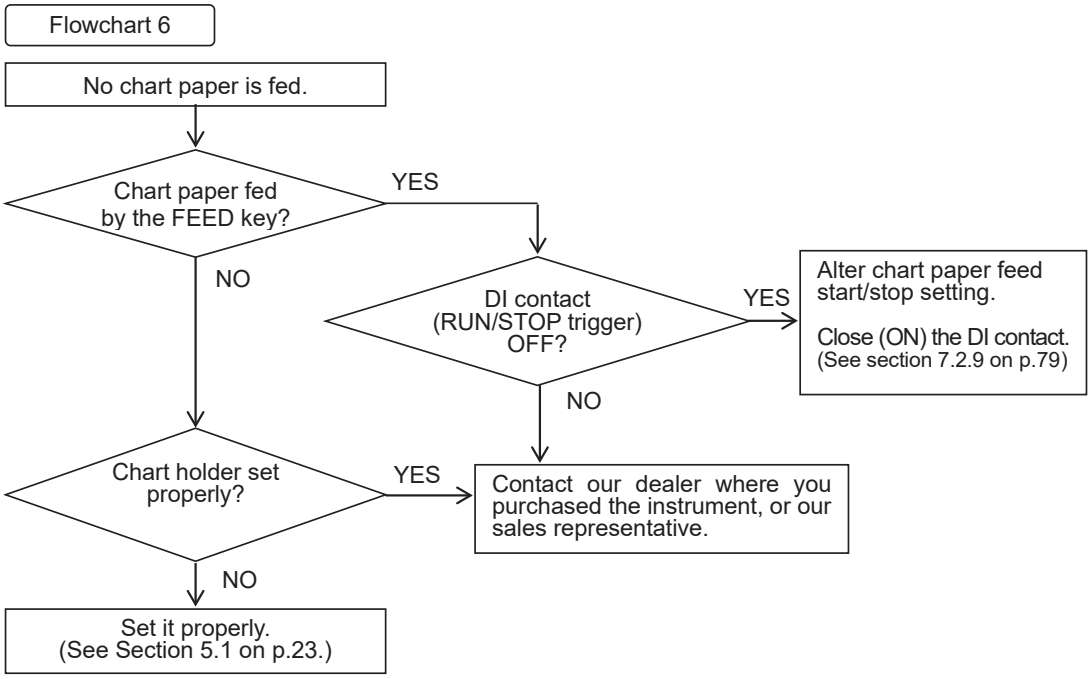

10.1.8 When the Chart Paper is not Fed Properly

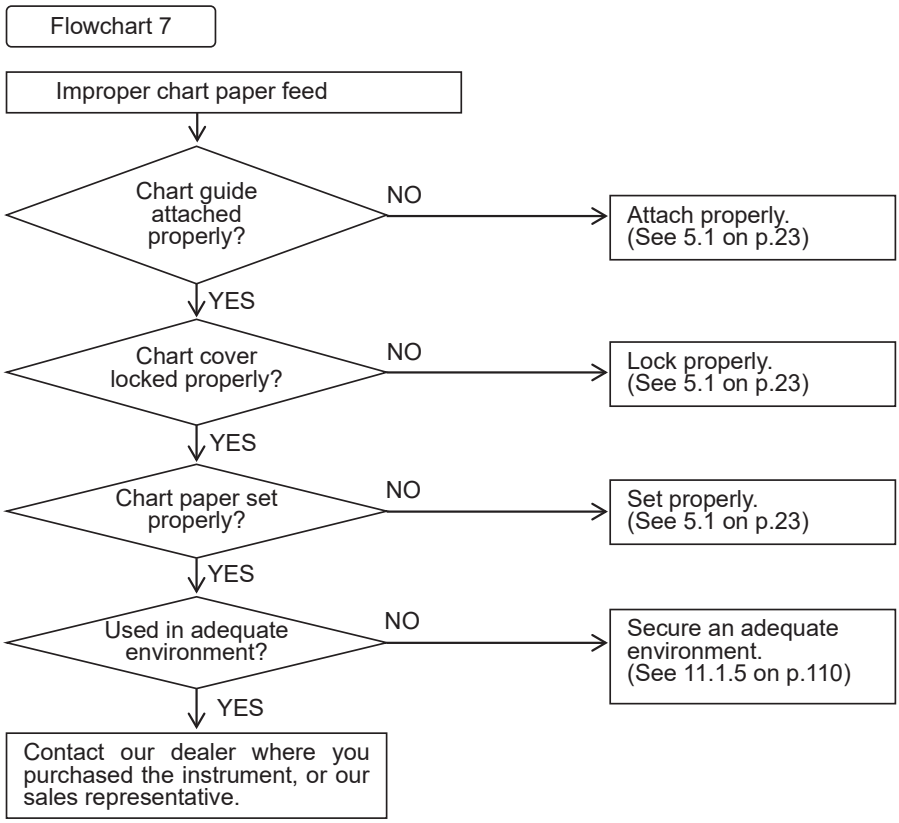

10.2 Self-Diagnosis Function (ERROR)

This instrument always performs self-diagnosis on the items listed in Table 10.2.1 below. When an error is found after self-diagnosis, a relevant error number is displayed.

10.2.1 Self-Diagnosis Items

Table 10.2.1 List of Self-Diagnosis Items

Type	Error message	Part	Diagnosis	Solution
Hardware error	EErr01	Zero point sensor	Zero point position of servomotor cannot be detected.	Please contact our main office or dealers.
	EErr02	ADC	AD conversion end error, Initialization error	
	EErr03	IC for clock	The clock battery has run down. [Note 1]	
	EErr04	WDT	Watchdog timer error	
	EErr05	EEP WRITE	Non-volatile memory writing error	
	EErr06	EEP READ1	Non-volatile memory reading error (Setup data)	
	EErr07	EEP READ2	Non-volatile memory reading error (Engineering data)	
	EErr08	EEP READ3	Non-volatile memory reading error (ADC Calibration data)	
	EErr 10	RJC error	Measurement error of temperature sensing element of RJC	
Operation error	EErr 11	Calibration error	Input range error at the time of voltage calibration	Calibrate correctly by Checking the input wiring.
	EErr 12	Calibration error	Input range error at the time of RTD calibration	
	EErr21	Area error	Input value is outside of the setting range.	Set properly.
	EErr22	Time error	Clock time setting error	
	EErr23	Setting range error	Setting the channel (Ch1) to which sum/difference/average operation cannot be set.	
	EErr24	Area error	Span L ≧ Span R	
	EErr25	Area error	Scale L ≧ Scale R	
	EErr26	Area error	Zone L ≧ Zone R or Zone R–Zone L is less than 5 mm.	
	EErr27	Reference channel setting error	The reference channel range of the sum/difference/average operation is not for Volt, TC, RTD and SCALE.	
	EErr28	All channels skip error	All channels have been set to Skip.	
Other	EErr41	Calibration value input error	Not calibrated with the specified input.	Calibrate it with a correct input.

[Note 1] The battery life lasts approx.10 years, however, this is subject to the type of environment in which it is used.

10.2.2 Error Display

- When multiple errors occur, their serial error numbers are automatically displayed.
- When an error is recovered, the error display can be canceled by pressing the “REC” key.

⚠ CAUTION

While an error is indicated, Auto, Manual and Data/Time are not indicated.

11. SPECIFICATIONS

11.1 Common Specifications

11.1.1 Input Signal

DC voltage: ±10 mV DC, 0 to 20 mV DC, 0 to 50 mV DC, ±200 mV DC,
±1 V DC, 0 to 5 V DC, ±10 V DC

Thermocouple: B, R, S, K, E, J, T, C, Au-Fe, N, PR40-20, PL-Ⅱ, U, L

RTD: Pt100, JPt100

Direct current: 4 to 20 mA DC (External shunt resistor: 250 Ω (sold separately)

11.1.2 Performance and Characteristics

Digital indication accuracy rating: See Section 11.2.1

Input impedance: 10 MΩ min. in mV, TC input (without burnout)
200 kΩ min. in mV, TC input (with burnout)
1 MΩ min. in voltage input
250 Ω in mA input [Externally install a shunt resistor (sold separately).]

Allowable signal source resistance:
10 kΩ max. in mV, TC input (without burnout)
100 Ω max. in mV, TC input (with burnout)
1 kΩ max. in Voltage input
10 Ω max. (per line) in RTD input

Normal mode rejection ratio: 60 dB min.(50/60±0.1 Hz)

Common mode rejection ratio: 140 dB min.(50/60±0.1 Hz)

Insulation resistance: 0.5 kV DC 20 MΩ min. between each terminal and grounding terminal

Withstand Voltage: 1.5 kV AC for 1 minute between power terminal and grounding terminal
0.5 kV AC for 1 minute between input terminal and grounding terminal
0.2 kV AC for 1 minute between input terminals
Interchannel maximum noise voltage: 200 V AC at 50/60 Hz

Vibration resistance: 10 to 60 Hz, 1 m/s^2 max.

Shock resistance: 2 m/s^2 max.

Clock precision: ±50 ppm max. (At Reference operating conditions)
The error due to power ON/OFF is not included.

Chart feed accuracy: ±0.1% max.

11.1.3 Structure

Mounting: Panel mounting (vertical panel)
Allowable backward inclination: Within 30°
Material (Color): Case: Polycarbonate (Black), Glass 10% UL94-V0
Door: Polycarbonate UL94-V2 (Transparent)
Dust-proof, drip-proof (IEC60529-IP65)

11.1.4 Power Source

Rated supply voltage range: 100 to 240 V AC
Working supply voltage range: 85 to 264 V AC
Rated power frequency: 50/60 Hz
Working frequency range: 45 to 65 Hz

Table 11.1.4 Power consumption

	100 V AC	Max. power consumption
6-dot recorder	About 25 VA	About 30 VA

11.1.5 Normal Operating Conditions

Ambient temperature: 0 to 50℃
Ambient humidity: 20 to 80 %RH
Supply voltage: 85 to 264 V AC
Supply frequency: 45 to 65 Hz
Vibration: 10 to 60 Hz 0.2 m/s^2 max.
Shock: Unacceptable
Magnetic field: 400 A/m max. (DC and AC: 50/60 Hz)
Noise: Normal mode (50/60 Hz)
DC voltage, Thermocouple: Peak value is lower than the span width of the measurement range.
RTD: 50 mV max.
Common mode (50/60 Hz): 250 V AC max.
Interchannel maximum noise voltage: 200 V AC at 50/60 Hz
Posture: Allowable backward inclination: Within 30°, Right-and-left level
Warm-up time: 30 minutes minimum from the time of power-on

11.1.6 Alarm Output (Option: LH6)

Number of output:	6 points (Built-in option, normally open)
Alarm type:	2 types (H, L), total 4 levels/channel
Contact point capacity:	250 V AC, 3 A max. (Resistive load)
	30 V DC, 3 A max. (Resistive load)
	125 V DC, 0.5 A max. (Resistive load)
Hysteresis width:	0.5%
Setting accuracy:	The same as Digital indication accuracy

11.1.7 Low Voltage Directive and EMC Directive

Low Voltage Directive: EN61010-1

EMC Directive: EN61326-1 Class A

At the EN61000-4-3 test condition:

DC voltage DC contact range: Accuracy Ratings + 3 digits

Thermocouple range: Accuracy Ratings + 5 digits

Resistance temperature detector range: Accuracy Ratings + 10 digits

11.1.8 DI Function (Option: RE6)

A maximum of 3 points can be set.

11.1.9 Paper-empty Detection Function (Option: FL6)

Detects the chart paper-empty to output an alarm.

11.2 Standard Specifications

11.2.1 Measurement Range

An arbitrary setup is possible by the front keypad.

Digital indication accuracy rating is described in Table11.2.1 below under the Reference operating conditions.

Reference operating conditions: Ambient temperature: 23±2℃
Ambient humidity: 55±10 %RH
Power supply voltage: 85 to 264 V AC
Power-supply frequency: 50/60 Hz±1%
Warm-up time: 30 minutes min.

(Performance is based on a state of no vibration or shocks.)

Terminal block reference junction compensation accuracy is not included in the digital indication accuracy rating.

Terminal block reference junction compensation accuracy:

B, R, S, Au-Fe, PR40-20: ±1℃

K, E, J, T, C, N, PL-Ⅱ, U, L: ±0.5℃

Table 11.2.1 Digital Indication Accuracy Rating

Type	Range	Measurement range	Measurement		
			Indication (Digital)		Recording (Analog)
			Accuracy	Max. resolution	Accuracy
DC voltage, current Input		-10 to 10 mV	±(0.2% of rdg + 3 digits)	10 μV	Digital indication accuracy ± (0.3% of span)
		0 to 20 mV	±(0.2% of rdg + 3 digits)	10 μV	
		0 to 50 mV	±(0.2% of rdg + 2 digits)	10 μV	
		-200 to 200 mV	±(0.2% of rdg + 3 digits)	100 μV	
		-1 to 1 V	±(0.1% of rdg + 3 digits)	1 mV	
		0 to 5 V	±(0.2% of rdg + 2 digits)	1 mV	
		-10 to 10 V	±(0.3% of rdg + 3 digits)	10 mV	
		4 to 20 mA	±(0.2% of rdg + 2 digits)	0.01 mA	
Thermocouple	B	0.0 to 1820.0℃	±(0.15% of rdg + 1℃) 400 to 600℃, ±2℃ Accuracy is not guaranteed within a range of 0 to less than 400℃	0.1℃/0.18℉	
		32.0 to 3308.0℉	±(0.15% of rdg + 1.8℉) 752 to 1112℉, ±3.6℉ Accuracy is not guaranteed within a range of 32 to less than 752℉		
	R1	0.0 to 1760.0℃	±(0.15% of rdg + 1℃) However, 0 to 100℃, ±3.7℃ 100 to 300℃, ±1.5℃		
		32.0 to 3200.0℉	±(0.15% of rdg + 1.8℉) However, 32 to 212℉, ±6.7℉ 212 to 572℉, ±2.7℉		

Type	Range	Measurement range	Measurement		
			Indication (Digital)		Recording (Analog)
			Accuracy	Max. resolution	Accuracy
Thermocouple	R2	0.0 to 1200.0℃	±(0.15% of rdg + 0.8℃) However, 0 to 100℃, ±3.7℃ 100 to 300℃, ±1.5℃	0.1℃/0.18℉	Digital indication accuracy ±(0.3% of span)
		32.0 to 2192.0℉	±(0.15% of rdg + 1.44℉) However, 32 to 212℉, ±6.7℉ 212 to 572℉, ±2.7℉		
	S	0.0 to 1760.0℃	±(0.15% of rdg + 1℃) However, 0 to 100℃, ±3.7℃ 100 to 300℃, ±1.5℃		
		32.0 to 3200.0℉	±(0.15% of rdg + 1.8℉) However, 32 to 212℉, ±6.7℉ 212 to 572℉, ±2.7℉		
	K1	-200.0 to 1370.0℃	±(0.15% of rdg + 0.7℃) However, -200 to -100℃, ±(0.15% of rdg + 1℃)		
		-328.0 to 2498.0℉	±(0.15% of rdg + 1.3℉) However, -328 to -148℉, ±(0.15% of rdg + 1.8℉)		
	K2	-200.0 to 600.0℃	±(0.15% of rdg + 0.4℃) However, -200 to -100℃, ±(0.15% of rdg + 1℃)		
		-328.0 to 1112.0℉	±(0.15% of rdg + 0.7℉) However, -328 to -148℉, ±(0.15% of rdg + 1.8℉)		
	K3	-200.0 to 300.0℃	±(0.15% of rdg + 0.3℃) However, -200 to -100℃, ±(0.15% of rdg + 1℃)		
		-328.0 to 572.0℉	±(0.15% of rdg + 0.5℉) However, -328 to -148℉, ±(0.15% of rdg + 1.8℉)		
	E1	-200.0 to 800.0℃	±(0.15% of rdg + 0.5℃)		
		-328.0 to 1472.0℉	±(0.15% of rdg + 0.9℉)		
	E2	-200.0 to 300.0℃	±(0.15% of rdg + 0.4℃)		
		-328.0 to 572.0℉	±(0.15% of rdg + 0.7℉)		
	E3	-200.0 to 150.0℃	±(0.15% of rdg + 0.3℃)		
		-328.0 to 302.0℉	±(0.15% of rdg +0.5℉)		
	J1	-200.0 to 1100.0℃	±(0.15% of rdg + 0.5℃) However, -200 to -100℃, ±(0.15% of rdg + 0.7℃)		
		-328.0 to 2012.0℉	±(0.15% of rdg + 0.9℉) However, -328 to -148℉, ±(0.15% of rdg + 1.3℉)		
	J2	-200.0 to 400.0℃	±(0.15% of rdg + 0.4℃) However, -200 to -100℃, ±(0.15% of rdg + 0.7℃)		
		-328.0 to 752.0℉	±(0.15% of rdg + 0.7℉) However, -328 to -148℉, ±(0.15% of rdg + 1.3℉)		
	J3	-200.0 to 200.0℃	±(0.15% of rdg + 0.3℃) However, -200 to -100℃, ±(0.15% of rdg + 0.7℃)		
		-328.0 to 392.0℉	±(0.15% of rdg + 0.5℉) However, -328 to -148℉, ±(0.15% of rdg + 1.3℉)		

Type	Range	Measurement range	Measurement		
			Indication (Digital)		Recording (Analog)
			Accuracy	Max. resolution	Accuracy
Thermocouple	T1	-200.0 to 400.0℃	±(0.15% of rdg + 0.5℃) However, -200 to -100℃, ±(0.15% of rdg + 0.7℃)	0.1℃/0.18℉	Digital indication accuracy ± (0.3 % of span)
		-328.0 to 752.0℉	±(0.15% of rdg + 0.9℉) However, -328 to -148℉, ±(0.15% of rdg + 1.3℉)		
	T2	-200.0 to 200.0℃	±(0.15% of rdg + 0.4℃) However, -200 to -100℃, ±(0.15% of rdg + 0.7℃)		
		-328.0 to 392.0℉	±(0.15% of rdg + 0.7℉) However, -328 to -148℉, ±(0.15% of rdg + 1.3℉)		
	C	0.0 to 2320.0℃	±(0.15% of rdg + 1℃)		
		32.0 to 4208.0℉	±(0.15% of rdg + 1.8℉)		
	Au-Fe	1.0 to 300.0 K	±(0.15% of rdg + 1 K) However, 1 to 20 K, ±2.4 K	0.1 K	
	N	0.0 to 1300.0℃	±(0.15% of rdg + 0.7℃)	0.1℃/0.18℉	
		32.0 to 2372.0℉	±(0.15% of rdg + 1.3℉)		
	PR40-20	0.0 to 1880.0℃	±(0.15% of rdg + 1℃) However, 0 to 300℃, ±37.6℃ 300 to 800℃, ±18.8℃		
		32.0 to 3416.0℉	±(0.15% of rdg + 1.8℉) However, 32 to 572℉, ±67.7℉ 572 to 1472℉, ±33.8℉		
	PL-Ⅱ	0.0 to 1390.0℃	±(0.15% of rdg + 0.7℃)		
		32.0 to 2534.0℉	±(0.15% of rdg + 1.3℉)		
	U	-200.0 to 400.0℃	±(0.15% of rdg + 0.5℃) However, -200 to -100℃, ±(0.15% of rdg + 0.7℃)		
		-328.0 to 752.0℉	±(0.15% of rdg + 0.9℉) However, -328 to -148℉, ±(0.15% of rdg + 1.3℉)		
	L	-200.0 to 900.0℃	±(0.15% of rdg + 0.5℃) However, -200 to -100℃, ±(0.15% of rdg + 0.7℃)		
		-328.0 to 1652.0℉	±(0.15% of rdg + 0.9℉) However, -328 to -148℉, ±(0.15% of rdg + 1.3℉)		
RTD	Pt100-1	-200.0 to 650.0℃	±(0.15% of rdg + 0.3℃)		
		-328.0 to 1202.0℉	±(0.15% of rdg + 0.6℉)		
	Pt100-2	-200.0 to 200.0℃	±(0.15% of rdg + 0.2℃)		
		-328.0 to 392.0℉	±(0.15% of rdg + 0.4℉)		
	JPt100-1	-200.0 to 630.0℃	±(0.15% of rdg + 0.3℃)		
		-328.0 to 1166.0℉	±(0.15% of rdg + 0.6℉)		
	JPt100-2	-200.0 to 200.0℃	±(0.15% of rdg + 0.2℃)		
		-328.0 to 392.0℉	±(0.15% of rdg + 0.4℉)		

For Input types (R, K, E, J, T, Pt100, JPt100), an input type is automatically selected depending on the measurement range.

B,R,S,K,E,J,T,N: JIS C 1602-1995 (IEC584-1)

C (WRe5-26): ASTM E988-1996

Au-Fe: ASTM E1751-2009

PR40-20: ASTM E1751-2009

PL-Ⅱ: ASTM E1751-2009

U: DIN43710: 1985 (Cu-CuNi)

L: DIN43710: 1985 (Fe-CuNi)

Pt100: JIS C 1604-1997 (IEC751)

JPt100: (JIS C 1604-1981)

11.2.2 Accuracy at the Computation

(1) Scaling

The accuracy rating at the scaling is shown as the following formula.
Scaling accuracy (digits) = ±(Range accuracy rating (digits) x Scaling factor + 2 digits)

$$\text{But, Scaling factor} = \frac{\text{Scaling span (digits)}}{\text{Measurement range span (digits)}}$$

(Example 1) When VOLT range is –1.000 to 1.000 V and Scaling range is 0.00 to 100.00.

Range accuracy rating = 0.1% x 1.000 V + 3 digits

(Input +1.000 V) = 4 digits

$$\text{Scaling factor} = \frac{10000 - 0}{1000 - (-1000)} = 5$$

Therefore, Scaling accuracy = ±(4 x 5 + 2)
= ±22 digits

$$\text{Analog recording accuracy} = \pm\left(4+\{1000-(-1000)\} \times \frac{0.3}{100}\right)$$
= ±10 digits
= ±0.01 V

(Example 2) When Type K is 0.0 to 200.0℃ and Scaling is 0.00 to 200.00.

Range accuracy rating =0.15% x 200.0 + 0.3℃

(Input 200℃) =0.6℃
=6 digits

$$\text{Scaling factor} = \frac{20000 - 0}{2000 - 0} = 10$$

Therefore, Scaling accuracy = ±(6 x 10+2)
= ±62 digits
= ±0.62℃

(2) Square Root Computation

The square root computation is shown as the following formula.

$$\text{Display value} = 10\sqrt{\text{Process variable}}$$

Display value accuracy rating: ε
Process variable accuracy: e
Process variable: x (converting into %)

$$\text{Display value} = 10\sqrt{x \pm e} \fallingdotseq 10\sqrt{x} \pm \frac{10e}{2\sqrt{x}}$$

$$\text{Therefore, Display value accuracy } \varepsilon = \frac{5e}{\sqrt{x}}$$

For input 4 to 20 mA, the square root computation accuracy $\mathcal{E}$ is as the following formula.

$$\text{Measuring 100\%} \quad \mathcal{E}_{100} = \frac{5e}{\sqrt{100}} = \frac{5(0.2+0.125)}{10} = 0.16\% \text{ rdg}$$

$$\text{Measuring 50\%} \quad \mathcal{E}_{50} = \frac{5e}{\sqrt{50}} = \frac{5(0.1+0.167)}{7.07} = 0.19\% \text{ rdg}$$

$$\text{Measuring 9\%} \quad \mathcal{E}_{9} = \frac{5e}{\sqrt{9}} = \frac{5(0.018+1.39)}{3} = 2.3\% \text{ rdg}$$

$$\text{Measuring 1\%} \quad \mathcal{E}_{1} = \frac{5e}{\sqrt{1}} = 5(0.002+12.5) = 62.5\% \text{ rdg}$$

If the process variable is low, as above, its accuracy rating is not valid.

(3) Decade

The accuracy rating at the decade computation is defined as the logarithm of display value. Under normal operating conditions, the accuracy rating is less than 1 digit, and it cannot be read.

(4) Difference, Sum and Average

The accuracy rating of Difference, Sum and Average is shown as the following formula.
Difference and Sum: Reference channel accuracy rating x 2
Average: Reference channel accuracy rating

(Example) When Reference channel VOLT is 00.00 to 10.00 V and Difference is -10.00 to 10.00.
Reference channel accuracy rating = ±(0.3% x 10.00 V + 3 digits)
= ±(1000 x 0.003 + 3)
= ±6 digits
Difference accuracy rating = ±6 x 2 = ±12 digits

11.2.3 Individual Specifications

Table 11.2.3 Individual Specification Items

Block	Item	Specification
Input	Measuring Point	6
	Input Sampling	10 sec/6CH
	Display Interval	2.5 sec
Record & Printer	Recording Form	Wire dot (6-color ink ribbon)
	Printing Form	
	Recording Width	100 mm
	Printing Period	10 sec/6CH [Note 1]
	Chart paper	Length: 16 m, Width: 114 mm, Folding width: 40 mm The length of the Clean Chart is 12 m.
	Chart feed speed	0, 1, 2, 3, 4, 5, 10, 15, 20, 25, 30, 40, 50, 60, 75, 80, 90, 100, 120, 150, 160, 180, 200, 240, 300, 360, 375, 450, 600, 720, 750, 900, 1200, 1500 mm/h (Analog recording will not be performed when the chart feed speed is set to 0 mm/h.)
	Recording color	No.1 (Purple), No.2 (Red), No.3 (Green), No.4 (Blue), No.5 (Brown), No.6 (Black) [Note 2]
	Printing color	Purple, Red, Green, Blue, Brown, Black
Weight		1.5 kg max.
Power consumption		30 VA max.

[Note 1] Select the Dot Print Interval from 10, 20, 30 and 60 seconds.

[Note 2] Colors are interchangeable.

11.2.4 Standard Functions

Table 11.2.4 Standard Functions

Item	Description
Analog indication	None
Analog recording	Analog recording with 6-color dot.
Engineering unit indication	None
Digital indication	Indicates Channel No., Process variable, Chart feed speed, Alarm setting value on the display.
Logging printing	Prints Date, Time, Scaling, Chart feed speed, Process variable and Engineering unit at a programmed interval. Synchronous printing/ Asynchronous printing can be selected depending on the setting.
List printing	Prints Chart feed speed, Sensor type, Measurement range, Engineering unit, Alarm value, Comment, Printing description, Logging printing ON/OFF, Zone, Partial Compression/Expansion
Engineering list printing	Prints Channel or Tag, Alarm function, Logging printing ON/OFF, Reference time, Interval, Scaling printing ON/OFF, Logging printing Sync./Async., Alarm hysteresis, Burnout, DI function(Option)
Affix printing	Prints Channel number near the analog record.
Manual printing	Prints Measurement result by key input. Analog recording pauses.
Dot printing skip	Skips recording of an unused channel.
Programming	Programs Chart feed speed, Alarm setting value, Logging printing interval, Dot point skip, Date and Time by key operation.
Memory backup	A built-in lithium battery protects the clock function. The battery life is 10 years. (Total power off period of the instrument: 5 years) A non-volatile memory stores setting data and calibration data.
Alarm	Sets 2 types (H, L) of alarms per channel. Sets a total of 4 levels.
Chart feed speed	Selects a Chart feed speed from 34 types.
Clock indication	Indicates Year, Month, Day, Hour and Minute. Sets the year in A.D, and adjusts leap year automatically.
Self-diagnosis	When malfunctions occur, “E Err ✳✳” is indicated. (✳✳: Type of error)
Scaling	Indicates and records the input of a signal 4 to 20 mA, etc. by converting it into engineering scales.

11.3 Standard Setting Functions

11.3.1 Standard Setting Functions

Table 11.3.1 Standard Setting Functions

Function	Description
Burnout	When input is burnt out, indication is deflected to the span side. Burnout can be specified for every channel. (DC voltage of ±50 mV max, TC input)
Tag Number	Sets a tag number by up to 7 figures per channel. (Printed at a logging printing)
Reference Junction Compensation	Specifies an inside/outside of the Reference Junction Compensation.
Copy Function	Copies a channel setting.
Input offset	Sets the input offset per channel.
Zone Recording (Track Recording)	Specifies a recording area per channel to separate the record into Tracks.
Partial Compression/Expansion	Records Partial Compression/Expansion to 1-crease line per channel.
Decade Recording Indication	Records and indicates by up to 5 decades. 2 digits are effective for indication and printing.
Alarm Printing	Prints Occurrence time, Occurrence channel, Alarm setting No. and Alarm type in red when an alarm occurs.
Alarm Recovery Printing	Prints Recovery time, Recovery channel, Setting No. and Alarm type in purple when alarm recovers.
Recording Start/Stop Printing	Prints Time and Start/End comment when recording starts and stops. Synchronous, Asynchronous or OFF can be selected.
Computation	Computes Square root.
Interchannel Computation	Computes Sum, Difference and Average values between channels.
Alarm Hysteresis Width	Sets an alarm hysteresis width to 0% FS or 0.5% FS.

11.4 Optional Functions

11.4.1 Remote Function of DI

Function	Description
Chart Feed Start/Stop	ON: Start, OFF: Stop
Changing Chart feed Speed	ON: 1st, OFF: 2nd
Comment Printing (Sync./Async.)	ON: Comment Printing
Manual Printing (Sync./Async.)	ON: Manual Printing
Date and Time Printing (Sync./Async.)	ON: Date and Time Printing

11.4.2 Alarm Output Function

6 relays

11.4.3 Communication Function

RS-232C (Standard)

RS-485 (Optional)

SHINKO TECHNOS CO., LTD.
OVERSEAS DIVISION

Head Office: 2-5-1, Senbahigashi, Minoo, Osaka, 562-0035, Japan
[URL] https://shinko-technos.co.jp/e/
[E-mail] overseas@shinko-technos.co.jp
Tel: +81-72-727-6100
Fax: +81-72-727-7006

No.HR71E13 2022.01