PA-3000-HZ Series (Single phase)

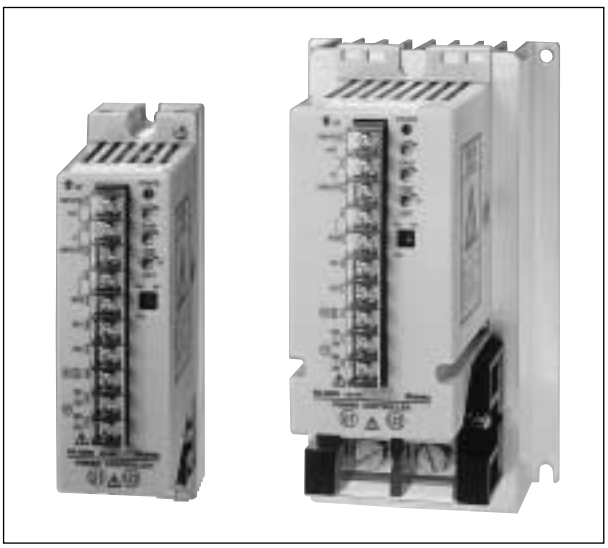

The PA-3000-HZ series includes a phase control system function for efficient control and a frequency division control system function for noise reduction.

Phase control system

This control system allows infinite resolution.
Power to the load can be smoothly adjusted by varying α (conduction angle) modulation depending on the input signal.

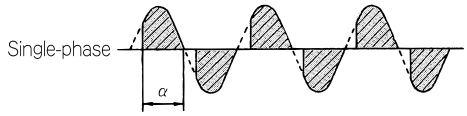

Frequency division control system

This control system suppresses noise.
Power to the load can be adjusted by varying ON/OFF time ratio depending on the input signal.

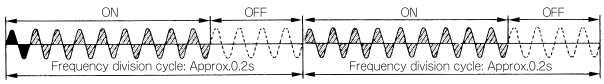

■ Features

- Compact and lightweight
- Phase control/frequency division control selectable
- Automatic frequency detecting function
- Linearization of Input/Output characteristics
- Programmable soft start time

PA-3000-HZ series is compact and lightweight, which allows for ease of mounting in an instrumentation panel. Six models for current ratings of 20A, 30A, 40A, 50A, 75A and 100A are available for the regulation of AC power in conjunction with a controller. Two control systems, phase control (H) for continuous power control and frequency division control (Z) with zero-cross switching, can be selected by the built-in switch and available for various applications and power environments.

■ Model name

PA－3 □□□ － HZ			Single phase	
Rated current	020		20A	W48×H172×D143mm
	030		30A	
	040		40A	W68×H188×D148mm
	050		50A	
	075		75A	W116×H200×D157mm
	100		100A	
Control system		HZ	H: Phase control (Default), Z: Frequency division control	

Please specify the specifications from the above □□□ column.
For further details, consult the agent or us.

Ordering example

PA－3030－HZ

- Base model
- Rated current: 30A
- Control system: Phase control/Frequency division control

Shinko

■ Standard specifications

Rated current	PA-3020-HZ------ 20A　PA-3050-HZ------ 50A PA-3030-HZ------ 30A　PA-3075-HZ------ 75A PA-3040-HZ------ 40A　PA-3100-HZ------ 100A
Input signal	DC current: 4 to 20mA DC DC voltage: 1 to 5V DC or ON/OFF contact signal (selectable by terminals)
Input resistance	100Ω (4 to 20mA DC), 25kΩ (1 to 5V DC)
Rated voltage	100 to 120V AC, 200 to 240V AC Common to 100V line and 200V line (selectable by terminals) Allowable voltage fluctuation range: 90 to 110% of the rated voltage
Rated frequency	50/60Hz (automatic selection) Allowable frequency fluctuation: ±2Hz of the rated frequency (operation guarantee) ±1Hz of the rated frequency (performance guarantee)
Output range	0 to 98% of the rated voltage
Minimum load current	0.5A (At 98% output)
Applicable load	Resistive load Inductive load (transformer primary control, Gauss: 1.25T or less for Phase control system only)
Control system	Phase control/Frequency division control (Selectable by built-in DIP switch)
Output setting range	Gradient setting (0 to 100%) Lower-limit setting (0 to 100%)
Other functions	Soft start, Soft up/down (approx. 1 to 20 seconds) Soft start at reset of power interruption
Mounting method	Surface mounting
Isolation resistance	Between power terminal and case: 20MΩ or greater at 500V DC
Dielectric strength	Between power terminal and ground (radiation fin): 2000V AC for 1 minute
Attached functions	・Soft start time setting The Soft start time and Soft up/down time are programmable. This function can handle a rapid change of load voltage and input signal, and reduces overloading of loads like overcurrent. ・Gradient setting function The output gradient according to input signal can be adjusted by a built-in trimmer. A gradient setting unit can also be connected externally. ・Lower-limit setting function By the built-in lower-limit setting unit, the variation band of output according to ON/OFF contact input signal can be adjusted, so efficient control can be performed. A Lower-limit setting unit can also be connected externally.
Ambient temperature	-15 to 55℃ (Operation guarantee) 0 to 40℃ (Performance guarantee)
Ambient humidity	30 to 90%RH
Weight	20A, 30A : Approx. 1.0kg 40A, 50A : Approx. 1.3kg 75A, 100A : Approx. 1.9kg
Accessories	Instruction manual, 1 copy

■ External dimensions

PA-3020-HZ, PA-3030-HZ

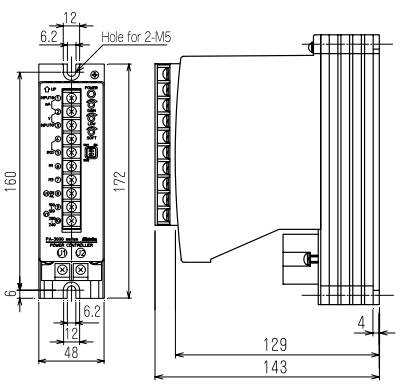

PA-3040-HZ, PA-3050-HZ

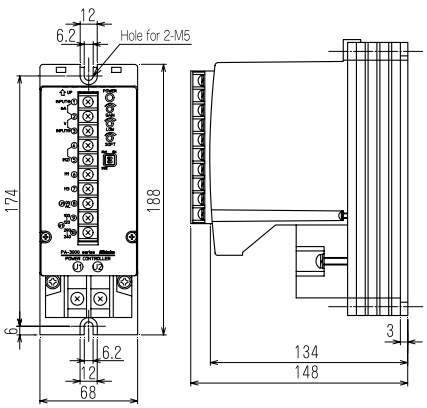

PA-3075-HZ, PA-3100-HZ

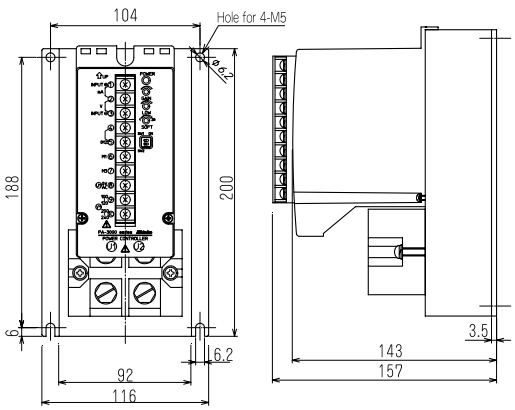

■ Terminal arrangement and name (30A)

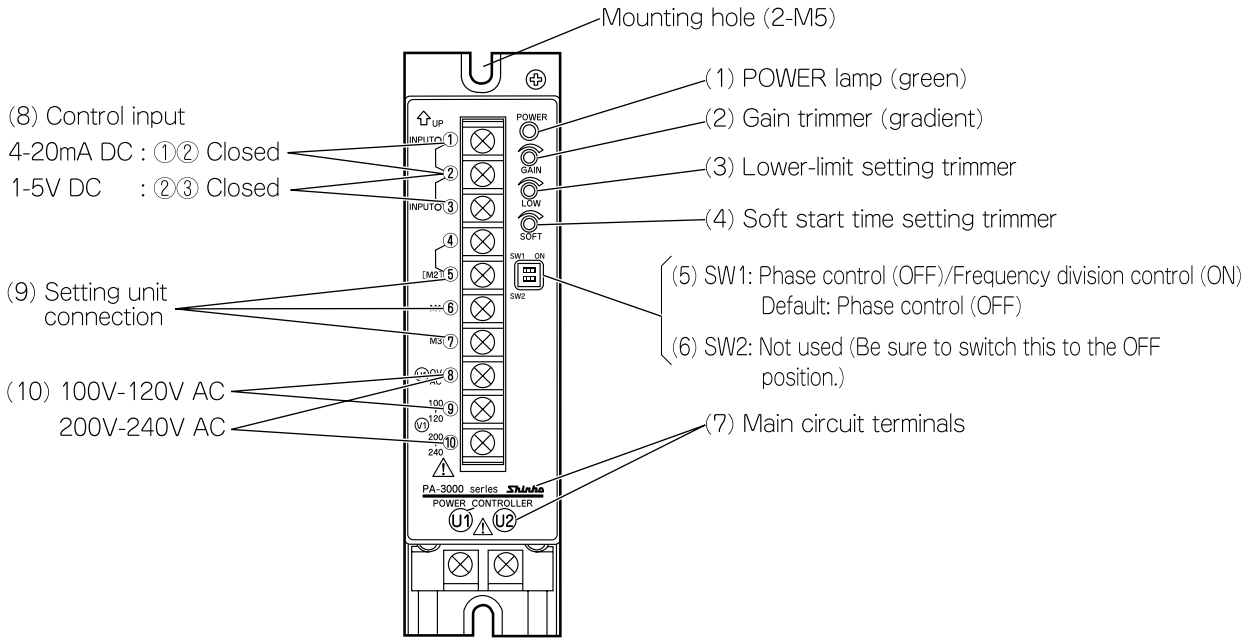

Name	Functions
(1) POWER lamp	Lights up (green) when the power is supplied to terminals ⑧ ,⑨ and ⑩. Flashes while identifying the frequency after the power is turned on.
(2) Gain trimmer (gradient)	Gradient setting is possible. 100% when turned fully to the right ↷. Generally used at 100%. For Current/Voltage input, the gradient setting unit is installed externally.
(3) Lower limit setting trimmer	Output value when control input is 0% (Terminal Ⓗ is connected to Ⓒ) can be set. The output value becomes 0% when it is turned fully to the left ↶. Generally used at 0% position. For the contact input, the lower-limit setting unit is also installed externally.
(4) Soft start setting trimmer	Soft start time can be set. When it is turned fully to the left ↶: Approx. 1 second. When it is turned fully to the right ↷: Approx. 20 seconds
(5) SW1	Switches frequency division control (ON) or phase control (OFF).
(6) SW2	Not used. Be sure to switch this to the OFF position.
(7) Main circuit terminals	Terminals for main circuit (U1, U2) running to the thyristor element.
(8) Control input	Input terminals for current (4 to 20mA DC) or voltage (1 to 5V DC) signal to control the output
(9) Setting unit connection	For Current/Voltage input: Terminals to connect the gradient setting unit and manual setting unit externally For Contact input: Terminals to connect output signals (Ⓗ,Ⓒ,Ⓛ) from the controller with upper-limit and lower-limit setting units
(10) Power supply	Terminals to supply power to the power controller 100 to 120V AC: Terminals ⑧ and ⑨, 200 to 240V AC: Terminals ⑧ and ⑩

■ Wiring example

● Current signal 4 to 20mA DC

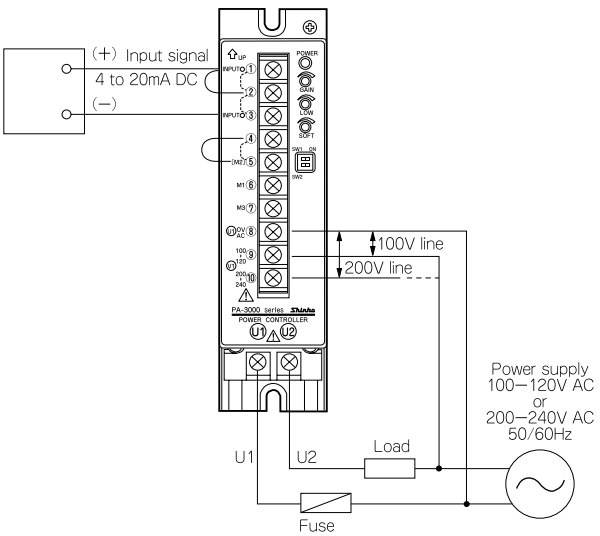

● Manual setting unit

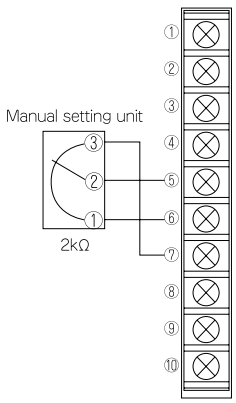

● Voltage signal 1 to 5V DC

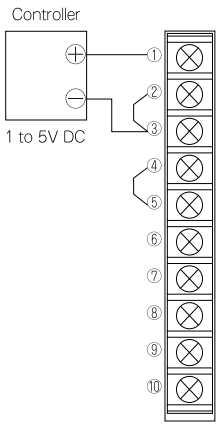

● Current signal 4 to 20mA DC
with gradient setting unit

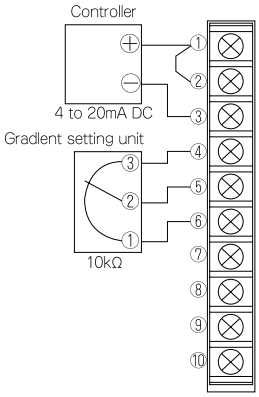

● Current signal 4 to 20mA DC
with manual setting unit

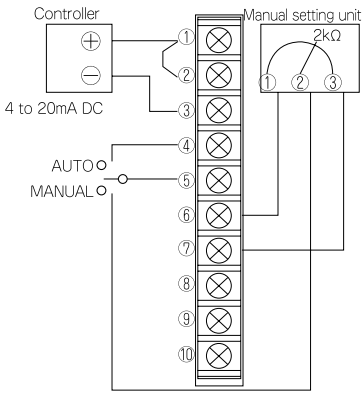

● Parallel running of 3 units
by 4 to 20mA DC

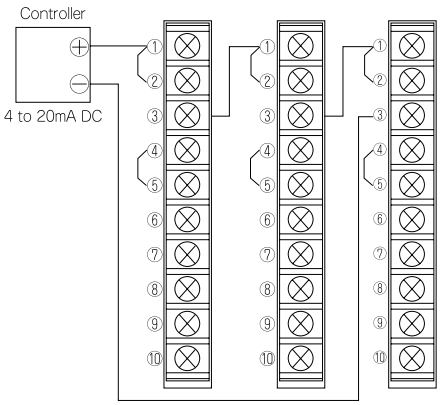

● Current signal 4 to 20mA DC
with gradient setting unit
and manual setting unit

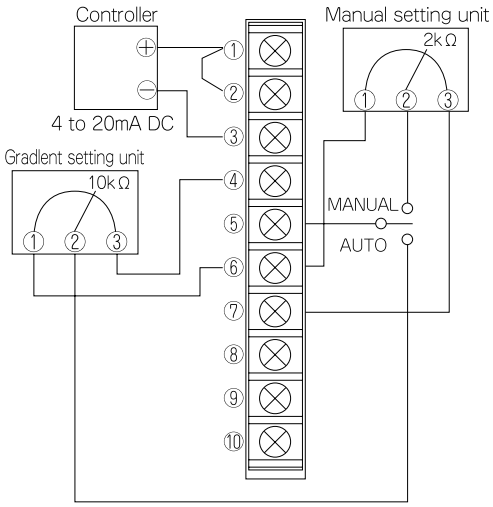

Contact input signal

● With upper-limit setting unit only

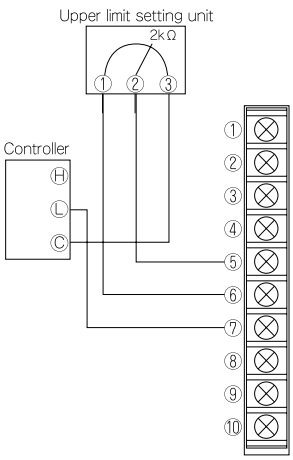

● With upper-limit setting unit
and lower-limit setting unit

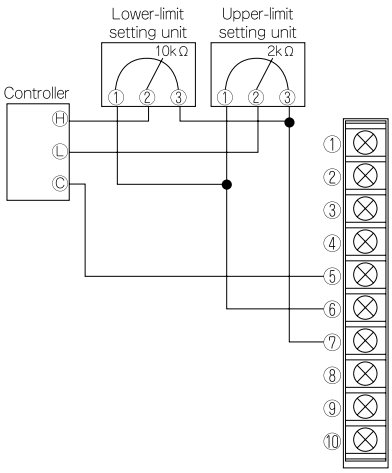

PA-3000-H3 series (Three-phase)

Phase control system for efficient control

To ensure enhanced input/output characteristics, partial feedback of outputs is provided with the phase control system. The power controllers based on the phase control system are available with voltage feedback, current feedback, power feedback and no feedback type. The optimal power controllers can be selected according to the particular characteristics of the heating element (nichrome wire, silicon carbide or other materials).

75A, 100A

150A, 200A, 250A

300A, 400A, 500A

■ Features

- Compact and lightweight
- 12 types of current ratings
- Optimal model selection according to the characteristics of the heating element
- Various types of protection function

PA-3000-H3 series are AC power controllers designed for three-phase load applications.
Since the power controllers are compact and lightweight, this allows for ease of mounting in an instrumentation panel.
12 models for current ratings from 30A to 1000A are available for regulation of AC power in conjunction with a controller.
AC power can also be adjusted manually.

■ Model name

PA－3 □□□ － □H3			Three-phase	
Rated current	030		30A	W180×H325×D190mm
	050		50A	
	075		75A	W260×H325×D190mm
	100		100A	
	150		150A	W394×H325×D190mm
	200		200A	
	250		250A	
	300		300A	W394×H495×D230mm
	400		400A	
	500		500A	
	750		750A	W640×H495×D350mm
	X00		1000A	
Control system		VH3	Phase control・Voltage feedback type	
		AH3	Phase control・Current feedback type *1	
		PH3	Phase control・Power feedback type *1	
		H3	Phase control・No feedback type	

Please specify the specifications from the above □□□, □ columns.
For further details, consult the agent or contact the manufacturer.
*1: For Current and Power feedback controllers, two current transformers (CT) are required for detecting load current and overcurrent.

Ordering example

PA－3030－AH3

- PA — Base model
- 3030 — Rated current: 30A
- AH3 — Control system: Phase control/Current feedback type

■ Standard specifications

Rated current (Three-phase)	PA-3030-VH3, AH3, PH3, H3 ------ 30A PA-3050-VH3, AH3, PH3, H3 ------ 50A PA-3075-VH3, AH3, PH3, H3 ------ 75A PA-3100-VH3, AH3, PH3, H3 ------ 100A PA-3150-VH3, AH3, PH3, H3 ------ 150A PA-3200-VH3, AH3, PH3, H3 ------ 200A PA-3250-VH3, AH3, PH3, H3 ------ 250A PA-3300-VH3, AH3, PH3, H3 ------ 300A PA-3400-VH3, AH3, PH3, H3 ------ 400A PA-3500-VH3, AH3, PH3, H3 ------ 500A PA-3750-VH3, AH3, PH3, H3 ------ 750A PA-3X00-VH3, AH3, PH3, H3 ------ 1000A
Input signal	3 types: 4 to 20mA DC, 1 to 5mA DC, ON/OFF contact signals (Switched by terminals)
Input resistance	100Ω (4 to 20mA DC), 400Ω (1 to 5mA DC)
Rated voltage	200V, 220V, 240V, 400V, 380V, 440V AC (Specify one of these) Allowable voltage fluctuation range: 85 to 110% of the rated voltage
Rated frequency	50/60Hz (Switched by terminals)
Output range	Voltage feed back: 0 to 95% of the rated voltage Current feed back: 0 to 100% of the rated current (However, max. output voltage: 95% of the rated voltage) Power feed back : (0 to 95% of the rated voltage) x (0 to 100% of the rated current) No feedback : 0 to 95% of the rated voltage
Output setting range	When the setting unit is installed externally Current input----------Gradient setting : 0 to 100% of the output range ON/OFF contact input----Upper limit setting: 0 to 100% of the maximum output Lower limit setting: 0 to 100% of the upper limit setting
Applicable load	Resistive load Inductive load (for controlling the primary side of transformer)
Cooling method	For rated current of 75A or less----- Self cooling For rated current 100A or greater--- Cooling fan is provided as standard
Alarm	Only available for with feed back types. When rapid fuse is blown out (all types) When cooling fan is abnormal (100A or greater) Overcurrent alarm (The output is turned off and the alarm is activated.) Contact output (with an indicator): Contact capacity 200V AC, 0.5A (resistive load)
Mounting method	Surface mounting
Isolation resistance	Between power terminals and protective ground terminal: 50MΩ or greater at 500V DC
Dielectric strength	Between power terminals and protective ground terminal: 2000V AC, 1 minute (for 200V) 2500V AC, 1 minute (for 400V)
Standard function	The rapid fuse is a standard in all models.
Ambient temperature	-15 to 55℃ (operation guarantee) 0 to 50℃ (performance guarantee), however, for allowable current corresponding to temperature exceeding 50℃, see the section of "Ambient temperatures and allowable current" on page 12.
Ambient humidity	30 to 90%RH
Weight	30A, 50A : Approx. 6.5kg 75A, 100A : Approx. 11kg 150A, 200A, 250A : Approx. 17kg 300A, 400A, 500A : Approx. 30kg 750A, 1000A : Approx. 90kg
Accessories	Instruction manual 1 copy

■ External dimensions

PA-3030, PA-3050

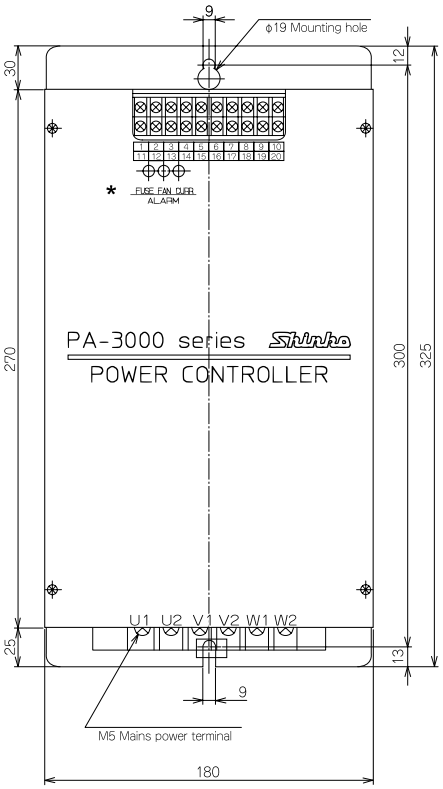

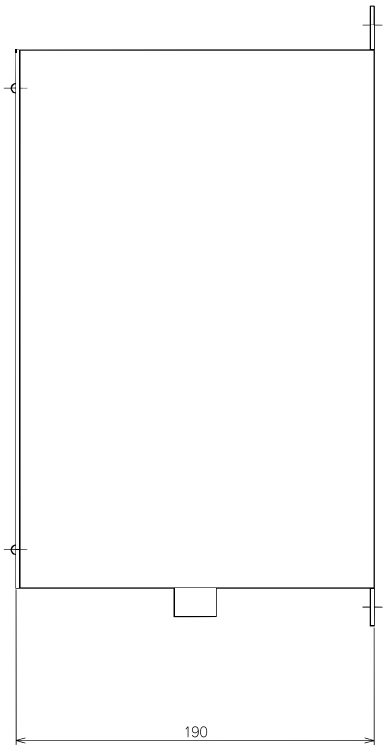

* For the models without feedback, there is no alarm function.

PA-3075, PA-3100

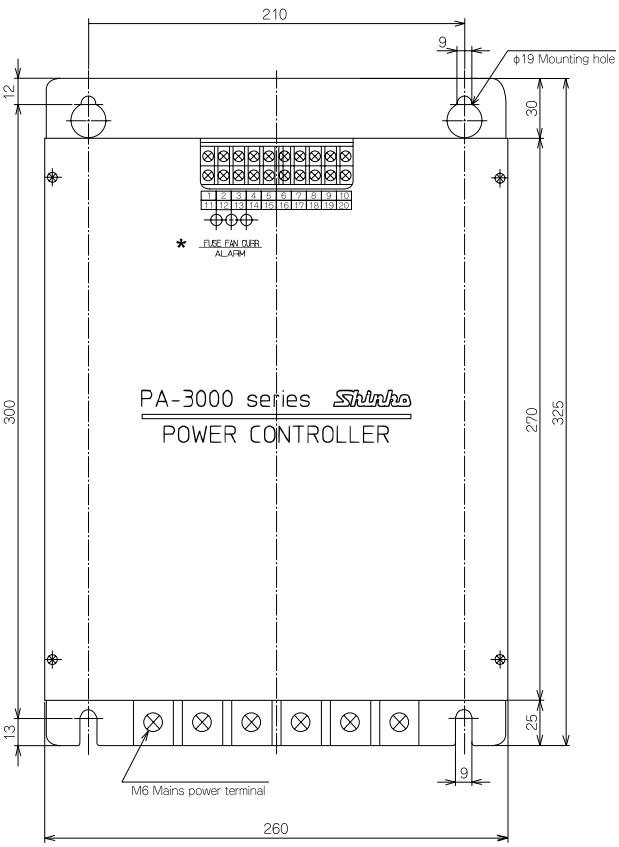

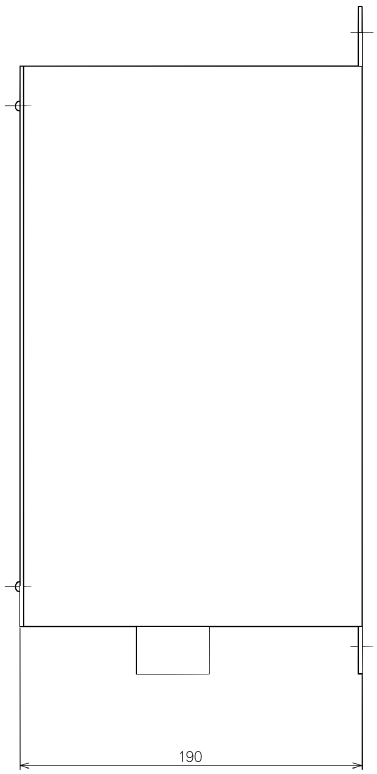

* For the models without feedback, there is no alarm function.

■ External dimensions

PA-3150, PA-3200, PA-3250

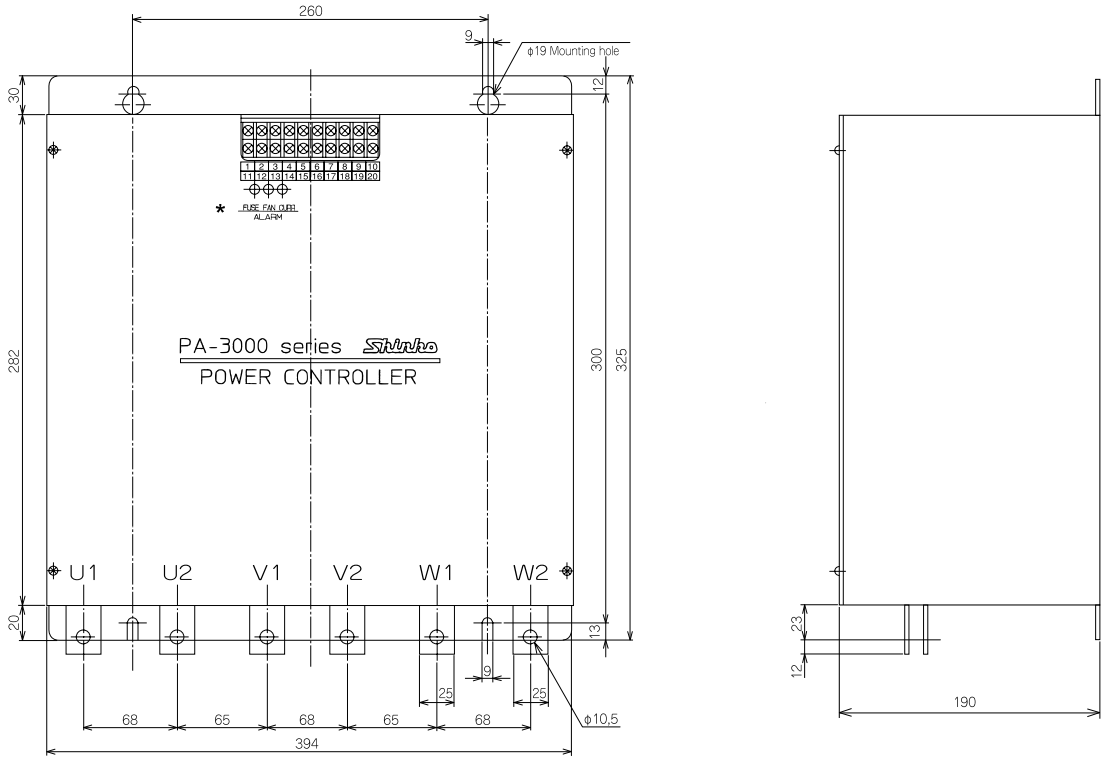

* For the models without feedback, there is no alarm function.

PA-3300, PA-3400, PA-3500

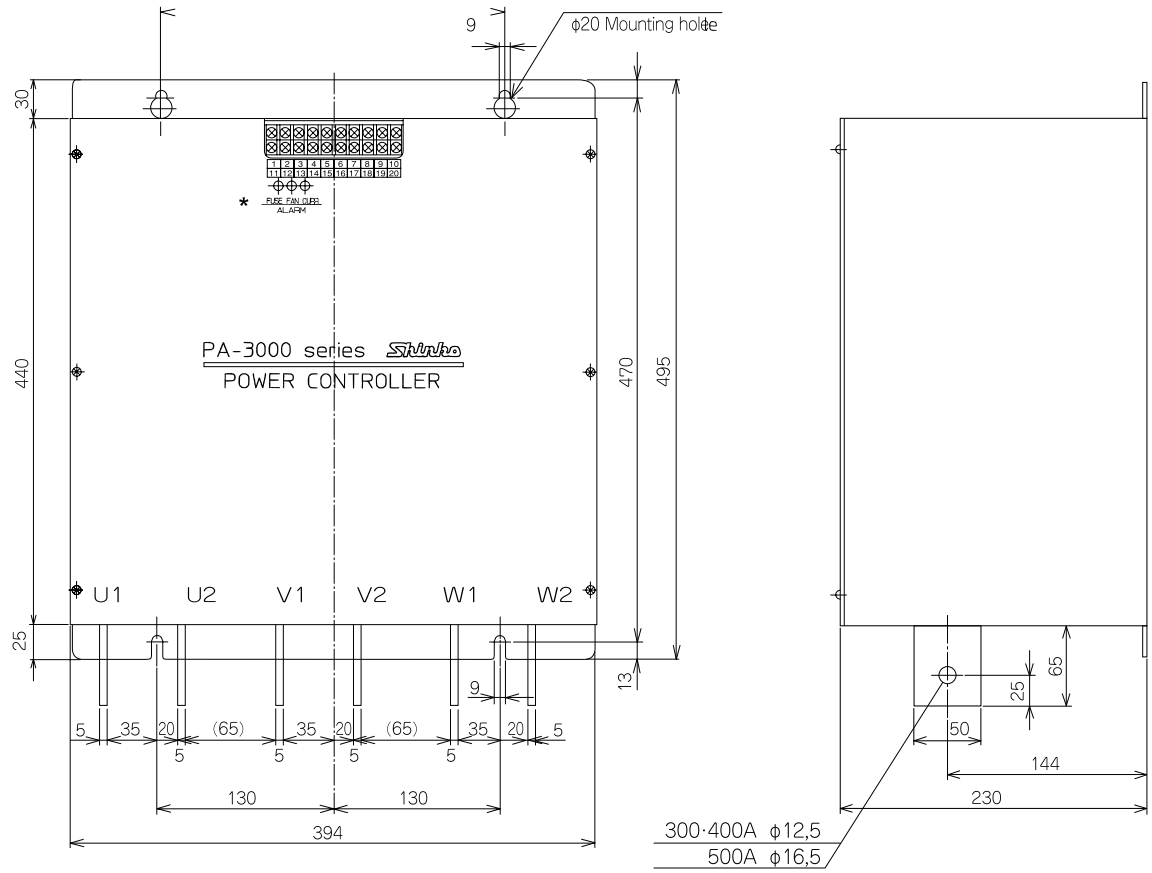

* For the models without feedback, there is no alarm function.

PA-3750, PA-3X00

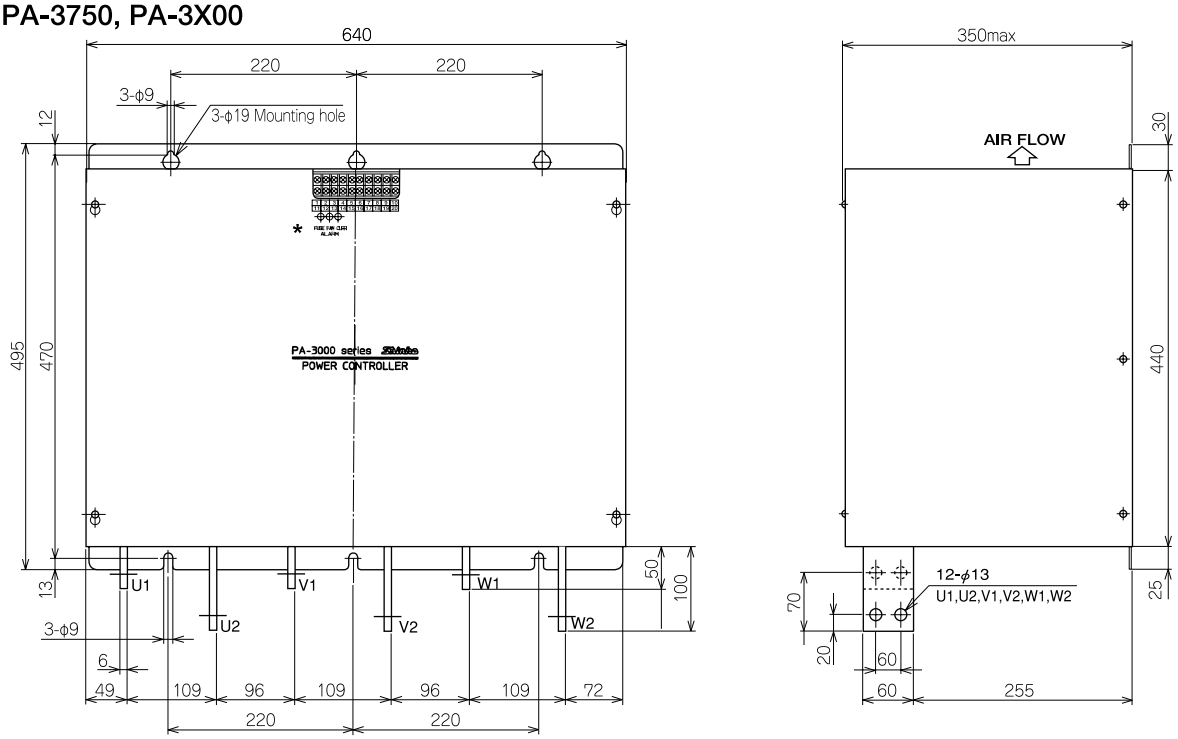

* For the models without feedback, there is no alarm function.

■ Input setting circuit

● Current input
4 to 20mA DC
or 1 to 5mA DC

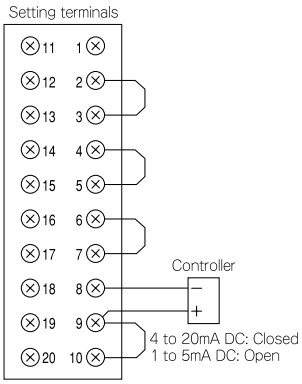

● Current input
with gradient
setting unit

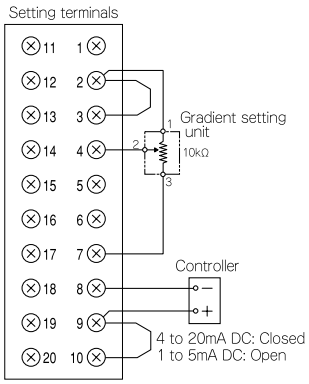

● Current input
with elevation
setting unit

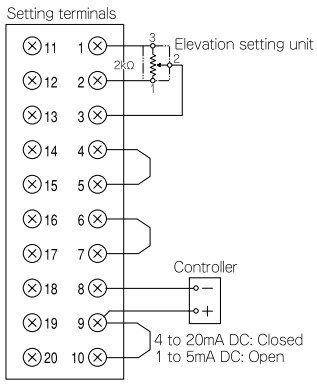

● Current input
with gradient setting unit
and elevation setting unit

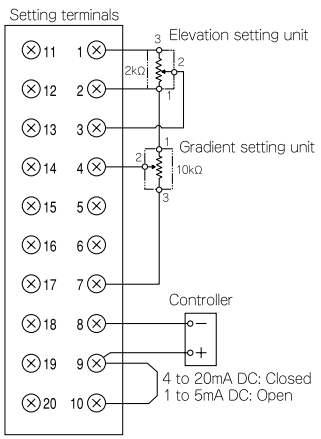

● Current input
with manual setting unit
auto/manual mode selector
switch

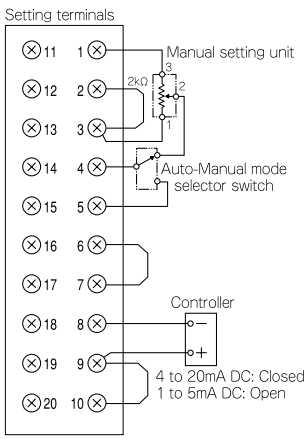

● Current input
with gradient setting unit, manual
setting unit and auto/manual
mode selector switch

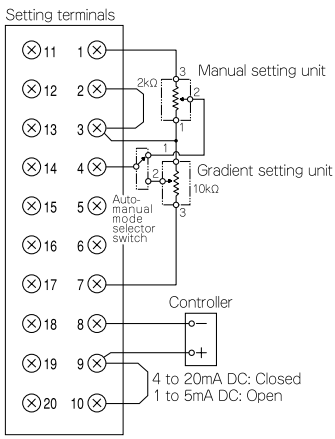

● Current input

with gradient setting unit, elevation setting unit, manual setting unit and auto/manual mode selector switch

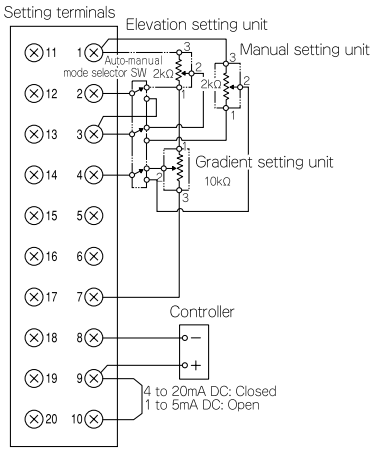

● ON/OFF contact input

with upper-limit setting unit and lower-limit setting unit

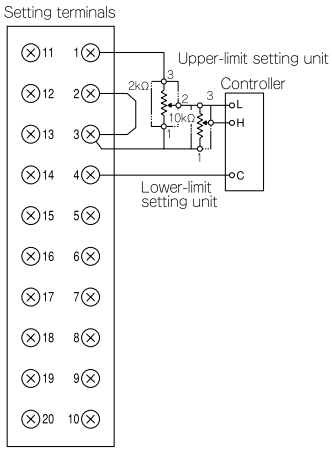

● ON/OFF contact input

with upper-limit setting unit

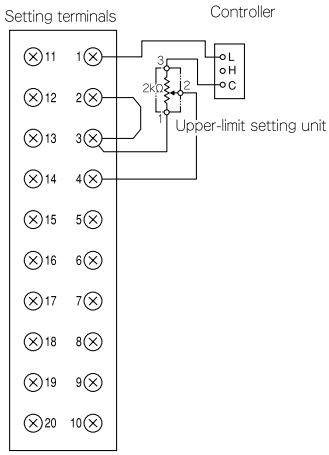

● ON/OFF contact input

with upper/lower-limits setting unit

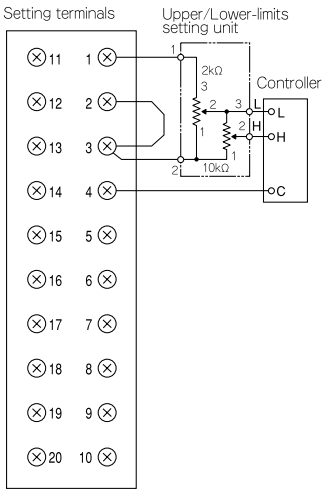

● Only manual setting

with manual setting unit

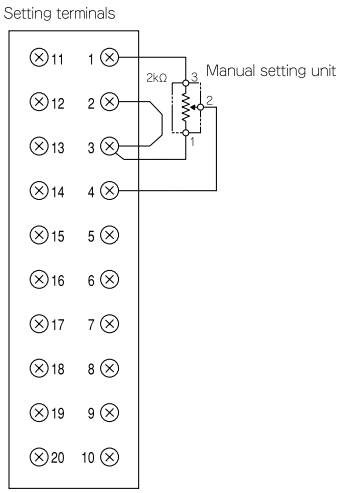

● Terminals numbers 11 to 20

For frequency selection, alarm output and current transformer (CT)

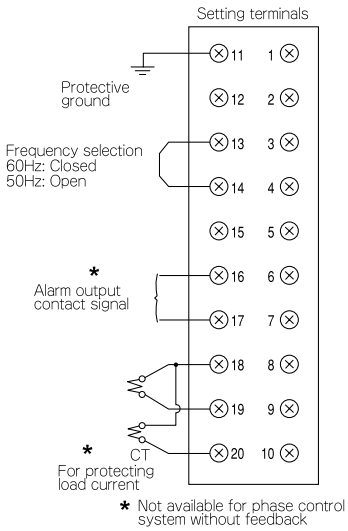

● Current input

Multiple power controllers can be controlled with one controller.

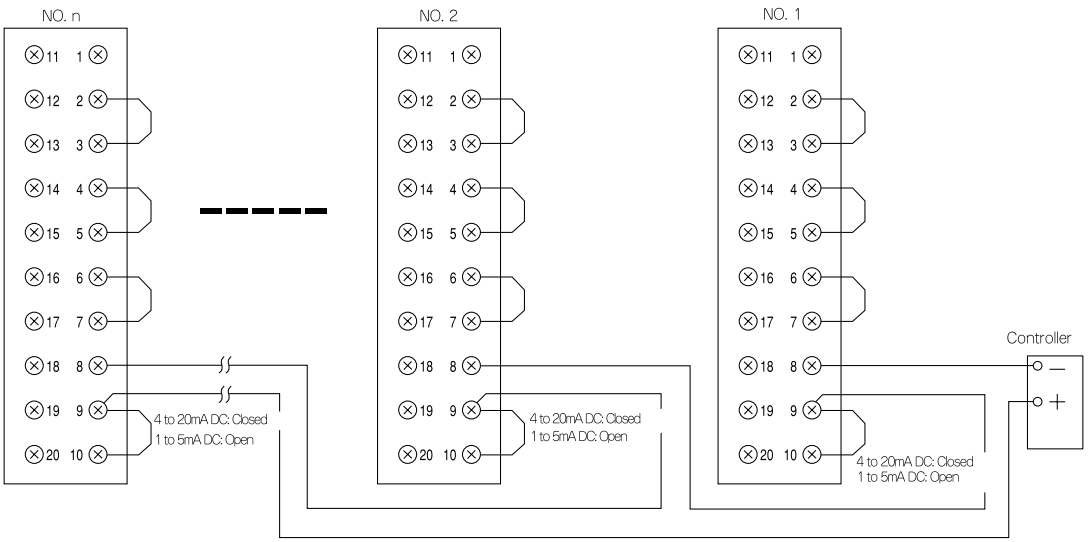

■ Configuration and connections

● Phase control : Voltage feedback type, No-feedback type

For heating elements of electric furnaces made from an iron and chrome alloy or a nickel and chrome alloy whose electric resistance temperature coefficient is small, if the output voltage of the power controller is kept constant, output power can be maintained almost constant. Voltage feedback type power controller detects voltage applied to the load and feeds back the signal.
Therefore a stable and highly linear output can be obtained.

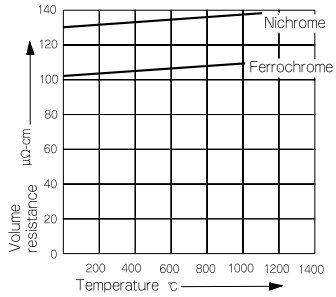

・ **Current input**

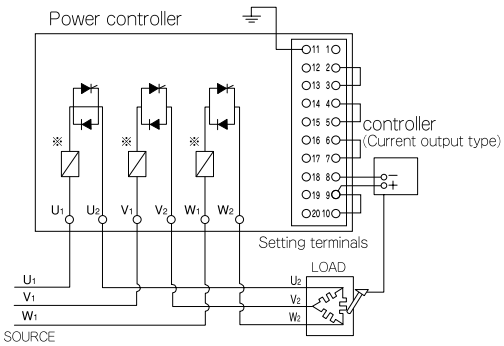

・ **ON/OFF contact input**

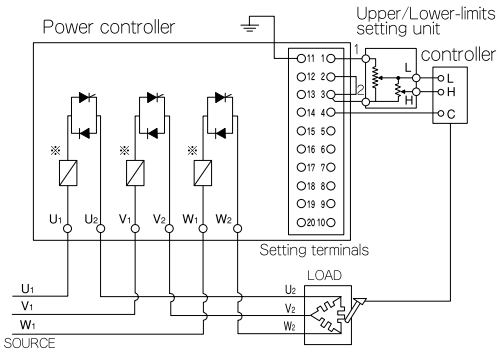

● Phase control: Current feedback type

For electric furnace heaters with platinum or molybdenum heating elements, electric resistance will be extremely low when the electric furnace is cool, and electric resistance varies 6 to 12 times higher at the operating temperature.
Even if output voltage is constant, output current varies depending on the temperature. When the furnace is cool, a large current will flow.
The current feedback type power controller detects the current flowing to the load and feeds back the signal. Therefore if maximum output of the thyristor is adjusted according to the maximum rated current of the electric furnace, the current in proportion to the input signal is outputted almost regardless of heater resistance change, and extremely stable control can be performed without exceeding the maximum rated value.

● Phase control: Power feedback type

For electric furnace heaters with silicon carbide (SiC) heating elements whose resistance varies depending on exothermic temperature and whose electric resistance deteriorates, due to aging, to a point where it is 4 times worse than the initial period when the heater was first used, even if output voltage is maintained constant, the output power varies depending on temperature and aging.
Power feedback type power controller detects voltage and current applied to the load, and multiplies them before feeding them back.
Therefore the power in proportion to the input signal is outputted regardless of the heater resistance variation, and the variation caused by heater deterioration is also automatically compensated for.

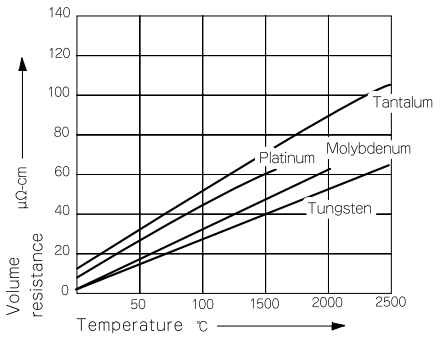

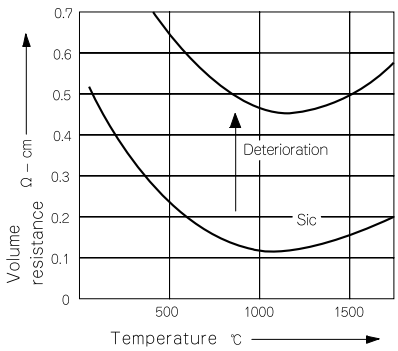

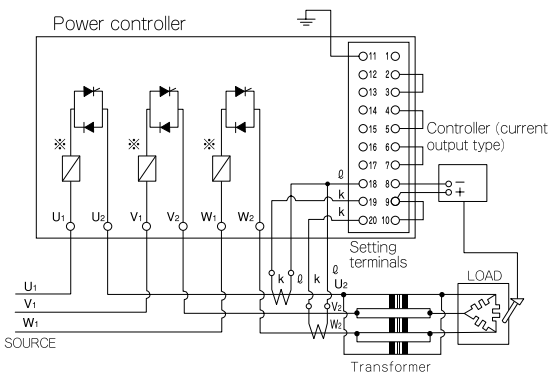

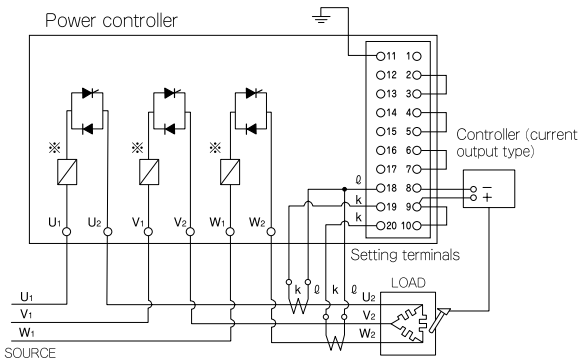

■ Characteristics and functions

● Ambient temperature and allowable current

Rated current of the power controller is an allowable value at 50℃ temperature.
If ambient temperature goes over 50℃, the allowable current decreases.

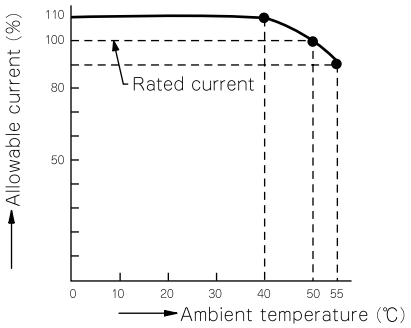

● Gradient setting

By connecting the 10kΩ setter to the terminals, gradient setting can be carried out.
This is effective to 3-zone control electric furnace which operates 3 thyristors with one controller.

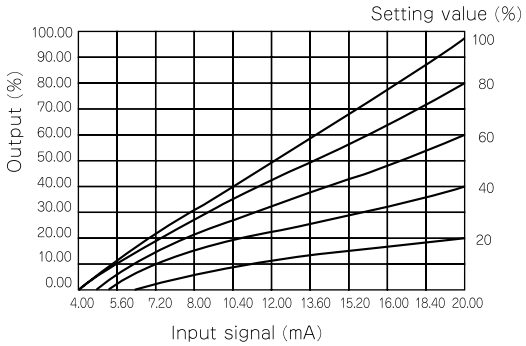

● Input/output characteristic

Compared with the No-feedback type, input/output characteristic raises and stable output can be obtained for the types which have feedback function.

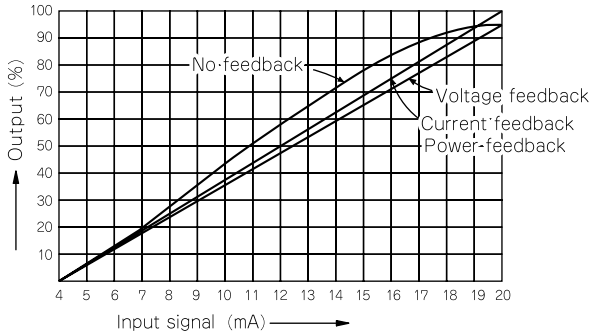

● Elevation

By connecting the 2kΩ setter to the terminals, elevation can be carried out.
Even if controller output is minimum, constant base power can be applied to an electric furnace.

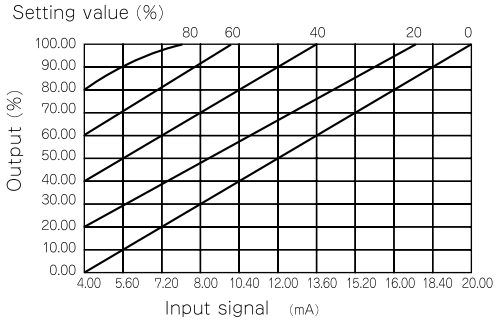

● Upper-limit, Lower-limit of ON/OFF contact type

An upper-limit value can be set within the range of 0 to 100% of the rated value and is assumed to be a%. A lower-limit value can be set within the range of 0 to 100% of the upper-limit value and is assumed to be b%.
Then actual lower-limit output becomes a x b (%).

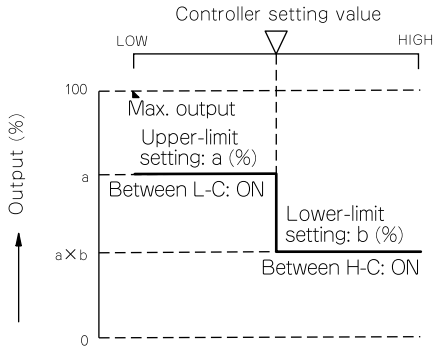

● Overcurrent gate OFF characteristic

If overcurrent 1.2 times as large as the rated current flows, the thyristor gate is switched off and this protects the thyristor from the overcurrent. (However, for the phase control system, 30 to 70% of the output voltage)

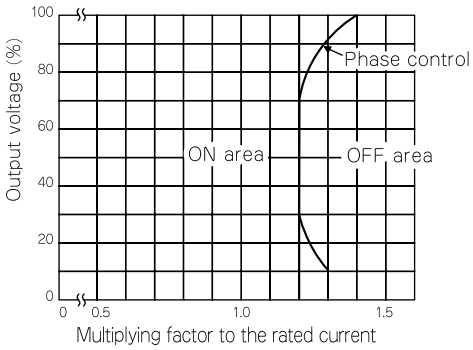

・This catalog is as of May 2004, and specifications are subject to change without notice.
・If you have any inquiries, please consult us or our agency.

SHINKO TECHNOS CO., LTD.
OVERSEAS DIVISION

Reg. Office : 1-2-48, Ina, Minoo, Osaka, 562-0015, Japan
Mail Address: P. O. Box 17, Minoo, Osaka, Japan
Tel : 81 - 72 - 721 - 2781
Fax : 81 - 72 - 724 - 1760
URL : http://www. shinko-technos. co. jp
E-mail : overseas @ shinko-technos. co. jp

54 101PA3E