No. ACS12CE5 2019.08

This manual contains instructions for communication functions of the ACS-13A.

> Serial communication and Console communication cannot be used together.
> When performing Serial communication, remove the exclusive cable (CMA) from the USB port of the PC and loader connector of the ACS-13A.
> When performing Console communication, it is not required to remove the Serial communication cables.
> However, do not send a command from the master side.

1. System Configuration

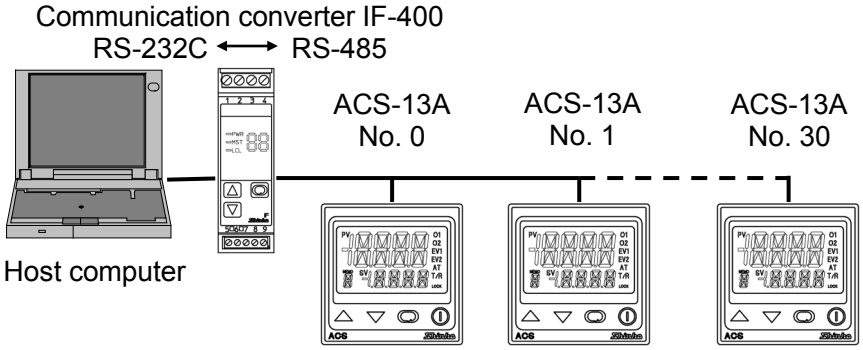

(Fig. 1-1)

2. Wiring

When using communication converter IF-400

[D-sub 25-pin connector] **[D-sub 9-pin connector]**

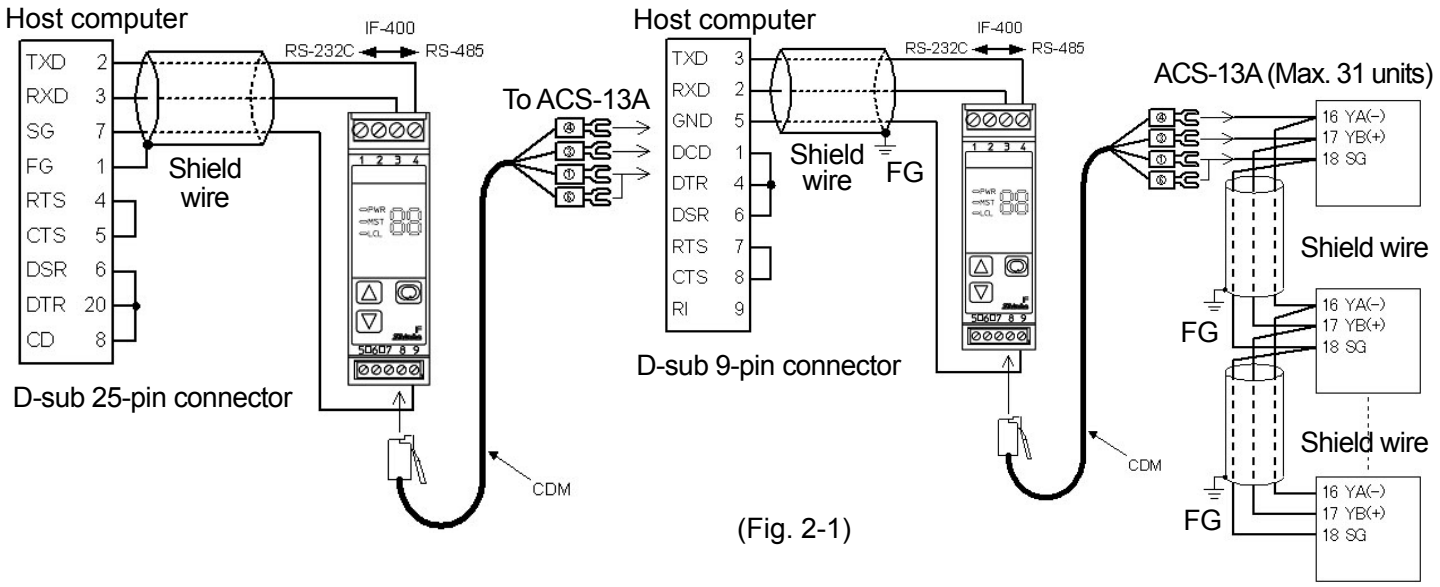

(Fig. 2-1)

Shield wire

Connect only one end of the shield to the FG to avoid a ground loop. If both ends of the shield wire are connected to the FG, the circuit will be closed, resulting in a ground loop. This may cause noise.
Be sure to ground the FG.
Recommended cable: OTSC-VB 2PX0.5SQ (made by Onamba Co., Ltd.) or equivalent (use a twisted pair cable.)

Terminator (Terminal resistor)

Communication converter IF-400 (sold separately) has a built-in terminator.
The terminator is mounted at the end of the wire when connecting multiple peripheral devices to a personal computer. The terminator prevents signal reflection and disturbance.
Do not connect the terminator to the communication line because each ACS-13A has built-in pull-up and pull-down resistors.

3. Communication Parameter Setting

Set each communication parameter in Auxiliary Function Setting Mode, following the procedure below.

(1)

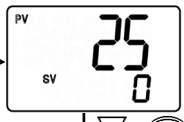

▽+◎ (Approx.3sec)

Proceed to Auxiliary Function Setting Mode.

Press and hold the ▽ and ◎ keys (in that order) together for approx. 3 seconds in PV/SV Display Mode.

The unit proceeds to Auxiliary Function Setting Mode.

(2)

◎(Twice)

Auxiliary Function Setting Mode

Press the ◎ key twice.

The unit proceeds to 'Communication protocol'.

(3)

Communication protocol

Select the communication protocol.

NoML : Shinko protocol (Factory default)

ModA : MODBUS ASCII mode

ModR : MODBUS RTU mode

(4)

Instrument number

Set the instrument number of this unit. (The instrument numbers should be set one by one when multiple instruments are connected in Serial communication, otherwise communication is impossible.). Setting range: 0 to 95 (Factory default: 0)

(5)

Communication speed

Set the communication speed equal to that of the host computer.

24: 2400 bps

48: 4800 bps

96: 9600 bps (Factory default)

192: 19200 bps

(6)

Data bit/Parity

Select the data bit and parity.

8NoN: 8 bits/No parity

7NoN: 7 bits/ No parity

8EVN: 8 bits/Even

7EVN: 7 bits/Even (Factory default)

8odd: 8 bits/Odd

7odd: 7 bits/Odd

(7)

Stop bit

Select the stop bit.

1: 1 bit (Factory default)

2: 2 bits

4. Communication Procedure

Communication starts with command transmission from the host computer (hereafter Master) and ends with the response of the ACS-13A (hereafter Slave).

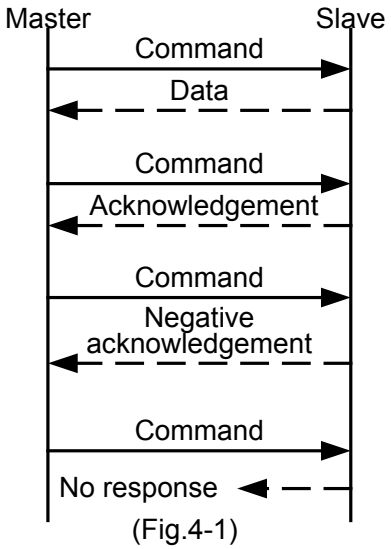

(Fig.4-1)

- **Response with data**
  When the master sends the reading command, the slave responds with the corresponding set value or current status.
- **Acknowledgement**
  When the master sends the setting command, the slave responds by sending the acknowledgement after the processing is terminated.
- **Negative acknowledgement**
  When the master sends a non-existent command or value out of the setting range, the slave returns a negative acknowledgement.
- **No response**
  The slave will not respond to the master in the following cases:
  - Global address (Shinko protocol) is set.
  - Broadcast address (MODBUS protocol) is set.
  - Communication error (framing error, parity error)
  - Checksum error (Shinko protocol), LRC discrepancy (MODBUS ASCII mode), CRC-16 discrepancy (MODBUS RTU mode)

Communication timing of the RS-485

Master Side (Take note while programming)

When the master starts transmission through the RS-485 communication line, the master is arranged so as to provide an idle status (mark status) transmission period of 1 or more characters before sending the command to ensure synchronization on the receiving side.

Set the program so that the master can disconnect the transmitter from the communication line within a 1 character transmission period after sending the command in preparation for reception of the response from the slave.

To avoid collision of transmissions between the master and the slave, send the next command after carefully checking that the master has received the response.

If a response to the command is not returned due to communication errors, set the Retry Processing to send the command again. (It is recommended to execute Retry twice or more.)

Slave Side

When the slave starts transmission through the RS-485 communication line, the slave is arranged so as to provide an idle status (mark status) transmission period of 1 or more characters before sending the response to ensure synchronization on the receiving side.

The slave is arranged so as to disconnect the transmitter from the communication line within a 1 character transmission period after sending the response.

5. Shinko Protocol

5.1 Transmission Mode

Shinko protocol is composed of ASCII codes.

Hexadecimal (0 to 9, A to F), which is divided into high order (4-bit) and low order (4-bit) out of 8-bit binary data in command is transmitted as ASCII characters.

Data format Start bit : 1 bit
Data bit : 7 bits
Parity: Even
Stop bit : 1 bit

Error detection: Checksum

5.2 Command Configuration

All commands are composed of ASCII.

The data (set value, decimal number) is represented by hexadecimal numbers.

Negative numbers are represented in 2's complement.

Numerals written below the command represent number of characters.

(1) Setting command

Header (02H)	Address	Sub address (20H)	Command type (50H)	Data item	Data	Checksum	Delimiter (03H)
1	1	1	1	4	4	2	1

(2) Reading command

Header (02H)	Address	Sub address (20H)	Command type (20H)	Data item	Checksum	Delimiter (03H)
1	1	1	1	4	2	1

(3) Response with data

Header (06H)	Address	Sub address (20H)	Command type (20H)	Data item	Data	Checksum	Delimiter (03H)
1	1	1	1	4	4	2	1

(4) Acknowledgement

Header (06H)	Address	Checksum	Delimiter (03H)
1	1	2	1

(5) Negative acknowledgement

Header (15H)	Address	Error code	Checksum	Delimiter (03H)
1	1	1	2	1

Header: Control code to represent the beginning of the command or the response.
ASCII codes are used.
Setting command, Reading command: STX (02H) fixed
Response with data, Acknowledgement: ACK (06H) fixed
Negative acknowledgement: NAK (15H) fixed

Instrument number (Address): Numbers by which the master discerns each slave.
Instrument numbers 0 to 94 and Global address 95.
ASCII codes (20H to 7FH) are used by adding 20H to instrument numbers 0 to 95(00H to 5FH).
95 (7FH) is called Global address, which is used when the same command is sent to all the slaves connected. However, a response is not returned.

Sub address: 20H fixed.

Command type : Code to discern Setting command (50H) and Reading command (20H)

Data item: Classification of the command object.
Composed of 4-digit hexadecimal numbers, using ASCII.
(Refer to “7. Communication Command Table”.) (pp.9 to 13)

Data: The contents of data (set value) differs depending on the setting command.
Composed of 4-digit hexadecimal numbers, using ASCII.
(Refer to “7. Communication Command Table”.) (pp.9 to 13)

Checksum: 2-character data to detect communication errors. (Refer to “5.3 Checksum calculation”.)

Delimiter: Control code to represent the end of command
ASCII code ETX (03H) fixed.

Error code: Represents an error type using ASCII.
1 (31H)-----Non-existent command
2 (32H)-----Not used
3 (33H)-----Setting outside the setting range
4 (34H)-----Status unable to be set (e.g. AT is performing)
5 (35H)-----During setting mode by keypad operation

5.3 Checksum Calculation

Checksum is used to detect receiving errors in the command or data.
Set the program for the master side as well to calculate the checksum of the response data from the slaves so that the communication errors can be checked.

The ASCII code (hexadecimal) corresponding to the characters which range from the address to that before the checksum is converted to binary notation, and the total value is calculated.
The lower one byte of the total value is converted to 2’s complement, and then to hexadecimal numbers, that is, ASCII code for the checksum.

- 1’s complement: Reverse each binary bit. 0 will become 1 and vice versa.
- 2’s complement: Add 1 to 1’s complement.

Checksum calculation example

SV: 600℃ (0258H)
Address (instrument number): 0 (20H)

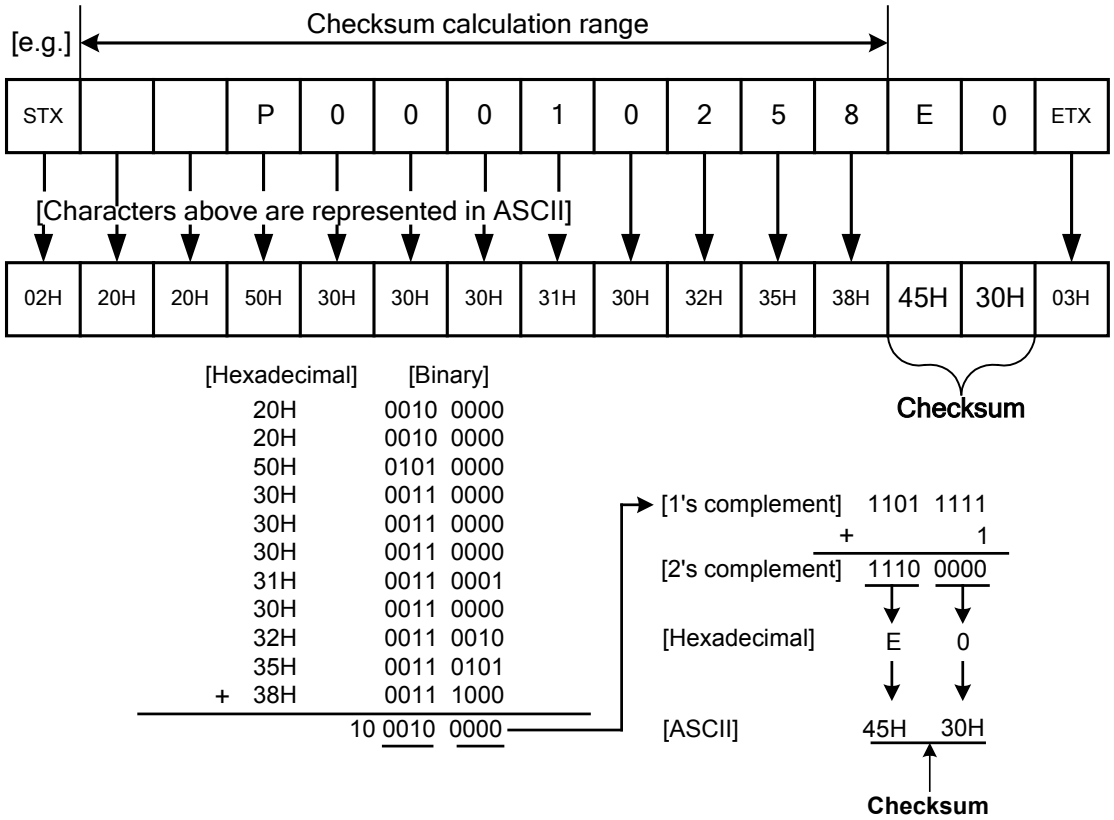

5.4 Command Example

Numerals written below the command represent number of characters.

(1) Reading (Address 1, PV)

• Reading command from the master

Header	Address	Sub address	Command type	Data item [0080H]	Checksum	Delimiter
(02H)	(21H)	(20H)	(20H)	(30H 30H 38H 30H)	(44H 37H)	(03H)
1	1	1	1	4	2	1

• A response from the slave in normal status [When PV=25℃ (0019H)]

Header	Address	Sub address	Command type	Data item [0080H]	Data [0019H]	Checksum	Delimiter
(06H)	(21H)	(20H)	(20H)	(30H 30H 38H 30H)	(30H 30H 31H 39H)	(30H 44H)	(03H)
1	1	1	1	4	4	2	1

(2) Reading (Address 1, SV)

• Reading command from the master

Header	Address	Sub address	Command type	Data item [0001H]	Checksum	Delimiter
(02H)	(21H)	(20H)	(20H)	(30H 30H 30H 31H)	(44H 45H)	(03H)
1	1	1	1	4	2	1

• A response from the slave in normal status [When SV=600℃ (0258H)]

Header	Address	Sub address	Command type	Data item [0001H]	Data [0258H]	Checksum	Delimiter
(06H)	(21H)	(20H)	(20H)	(30H 30H 30H 31H)	(30H 32H 35H 38H)	(30H 46H)	(03H)
1	1	1	1	4	4	2	1

(3) Setting (Address 1, SV) [when setting SV to 600℃ (0258H)]

• Setting command from the master

Header	Address	Sub address	Command type	Data item [0001H]	Data [0258H]	Checksum	Delimiter
(02H)	(21H)	(20H)	(50H)	(30H 30H 30H 31H)	(30H 32H 35H 38H)	(44H 46H)	(03H)
1	1	1	1	4	4	2	1

• A response from the slave in normal status

Header	Address	Checksum	Delimiter
(06H)	(21H)	(44H 46H)	(03H)
1	1	2	1

6. MODBUS Protocol

6.1 Transmission Mode

There are 2 transmission modes (ASCII and RTU) in MODBUS protocol.

6.1.1 ASCII Mode

ASCII Mode

Hexadecimal (0 to 9, A to F), which is divided into high order (4-bit) and low order (4-bit) out of 8-bit binary data in command is transmitted as ASCII characters.

Data format Start bit: 1 bit
Data bit: 7 bits (8 bits) (Selectable)
Parity: Even (No parity, Odd) (Selectable)
Stop bit: 1 bit (2 bits) (Selectable)

Error detection : LRC (Longitudinal Redundancy Check)

RTU Mode

8-bit binary data in command is transmitted as it is.

Data format Start bit: 1 bit
Data bit: 8 bits
Parity: No parity (Even, Odd) (Selectable)
Stop bit: 1 bit (2 bits) (Selectable)

Error detection: CRC-16 (Cyclic Redundancy Check)

6.2 Data Communication Interval

6.2.1 ASCII Mode

1 second or less (Max.1 second of interval between ASCII mode characters)

6.2.2 RTU Mode

3.5-character transmission times or less

To transmit continuously, an interval between characters which consist of one message, must be within 3.5-character transmission times. If an interval lasts longer than 3.5-character transmission times, the ACS-13A assumes that transmission from the master is finished, which results in a communication error, and will not return a response.

6.3 Message configuration

6.3.1 ASCII mode

ASCII mode message is configured to start by Header [: (colon)(3AH)] and end by Delimiter [CR (carriage return) (0DH) + LF (Line feed)(0AH)].

Header (:)	Slave address	Function Code	Data	Error check LRC	Delimiter (CR)	Delimiter (LF)

6.3.2 RTU Mode

RTU mode is configured to start after idle time is processed for more than 3.5-character transmissions, and end after idle time is processed for more than 3.5-character transmissions.

3.5 Idle Characters	Slave Address	Function Code	Data	Error Check CRC-16	3.5 Idle Characters

(1) Slave Address

Slave address is an individual instrument number on the slave side, and is set within the range 0 to 95 (00H to 5FH).

The master identifies slaves by the slave address of the requested message.

The slave informs the master which slave is responding to the master by placing its own address in the response message.

Slave address 0 (00H, Broadcast address) can identify all the slaves connected. However, slaves do not respond.

(2) Function code

The function code is the command code for the slave to undertake one of the following actions.

Function code	Contents
03 (03H)	Reading the set value and information from slaves
06 (06H)	Setting to slaves

Function code is used to discern whether the response is normal (acknowledgement) or if any error (negative acknowledgement) is occurred when the slave returns the response message to the master.

When acknowledgement is returned, the slave simply returns the original function code.

When negative acknowledgement is returned, the MSB of the original function code is set as 1 for the response.

For example, when the master sends request message setting 10H to the function code by mistake, slave returns 90H by setting the MSB to 1, because the former is an illegal function.

For negative acknowledgement, the exception codes below are set to the data of the response message and returned to the master in order to inform it of what kind of error has occurred.

Exception code	Contents
1 (01H)	Illegal function (Non-existent function)
2 (02H)	Illegal data address (Non-existent data address)
3 (03H)	Illegal data value (Value out of the setting range)
17 (11H)	Shinko protocol error code 4 [Status unable to be set (e.g.) AT is performing]
18 (12H)	Shinko protocol error code 5 (During setting mode by keypad operation)

(3) Data

Data differs depending on the function code.

A request message from the master is composed of data item, amount of data and setting data.

A response message from the slave is composed of byte count, data and exception codes in negative acknowledgements. The amount of data to be dealt with in one message is “1”.

Therefore, the amount of data is fixed as (30H)(30H)(30H)(31H).

Effective range of data is -32768 to 32767 (8000H to 7FFFH).

(4) Error check

ASCII Mode

After calculating LRC (Longitudinal Redundancy Check) from the slave address to the end of data, the calculated 8-bit data is converted to two ASCII characters, and are appended to the end of message.

How to calculate LRC

① Create a message in RTU mode.
② Add all the values from the slave address to the end of data. This is assumed as X.
③ Make a complement for X (bit reverse). This is assumed as X.
④ Add a value of 1 to X. This is assumed as X.
⑤ Set X as an LRC to the end of the message.
⑥ Convert the whole message to ASCII characters.

RTU Mode

After calculating CRC-16 (Cyclic Redundancy Check) from the slave address to the end of the data, the calculated 16-bit data is appended to the end of message in sequence from low order to high order.

How to calculate CRC-16

In the CRC-16 system, the information is divided by the polynomial series. The remainder is added to the end of the information and transmitted. The generation of a polynomial series is as follows.
(Generation of polynomial series: $X^{16} + X^{15} + X^{2} + 1$)

① Initialize the CRC-16 data (assumed as X) (FFFFH).
② Calculate exclusive OR (XOR) with the 1st data and X. This is assumed as X.
③ Shift X one bit to the right. This is assumed as X.
④ When a carry is generated as a result of the shift, XOR is calculated by X of ③ and the fixed value (A001H). This is assumed as X. If a carry is not generated, go to step ⑤.
⑤ Repeat steps ③ and ④ until shifting 8 times.
⑥ XOR is calculated with the next data and X. This is assumed as X.
⑦ Repeat steps ③ to ⑤.
⑧ Repeat steps ③ to ⑤ up to the final data.
⑨ Set X as CRC-16 to the end of message in sequence from low order to high order.

6.4 Message example

6.4.1 ASCII mode

Numerals written below the command represent the number of characters.

(1) Reading (Slave address 1, PV)

• A request message from the master
Amount of data means how many data items are to be read. It is fixed as 1 (30H 30H 30H 31H).

Header	Slave address	Function code	Data item [0080H]	Amount of data [0001H]	Error check LRC	Delimiter CR+LF
(3AH)	(30H 31H)	(30H 33H)	(30H 30H 38H 30H)	(30H 30H 30H 31H)	(37H 42H)	(0DH 0AH)
1	2	2	4	4	2	2

• Response message from the slave in normal status [When PV=600℃ (0258H)]
The response byte count means the byte count of data which have been read. It is fixed as 2 (30H 32H).

Header	Slave address	Function code	Response byte count [02H]	Data [0258H]	Error check LRC	Delimiter CR+LF
(3AH)	(30H 31H)	(30H 33H)	(30H 32H)	(30H 32H 35H 38H)	(41H 30H)	(0DH 0AH)
1	2	2	2	4	2	2

(2) Reading (Slave address 1, SV)

• A request message from the master
Amount of data means how many data items are to be read. It is fixed as 1 (30H 30H 30H 31H).

Header	Slave address	Function code	Data item [0001H]	Amount of data [0001H]	Error check LRC	Delimiter CR+LF
(3AH)	(30H 31H)	(30H 33H)	(30H 30H 30H 31H)	(30H 30H 30H 31H)	(46H 41H)	(0DH 0AH)
1	2	2	4	4	2	2

• Response message from the slave in normal status [When SV=600℃ (0258H)]
The response byte count means the byte count of data which have been read. It is fixed as 2 (30H 32H).

Header	Slave address	Function code	Byte count [02H]	Data [0258H]	Error check LRC	Delimiter CR+LF
(3AH)	(30H 31H)	(30H 33H)	(30H 32H)	(30H 32H 35H 38H)	(41H 30H)	(0DH 0AH)
1	2	2	2	4	2	2

• Response message from the slave in exception (error) status (When a data item is incorrect)
The function code MSB is set to 1 for the response message in exception (error) status [83H (38H 33H)].
The exception code 02H (30H 32H: Non-existent data address) is returned (error).

Header	Slave address	Function code	Exception code [02H]	Error check LRC	Delimiter CR+LF
(3AH)	(30H 31H)	(38H 33H)	(30H 32H)	(37H 41H)	(0DH 0AH)
1	2	2	2	2	2

(3) Setting (Slave address 1, SV)

• A request message from the master [When setting SV to 600℃ (0258H)]

Header	Slave address	Function code	Data item	Data	Error check	Delimiter
(3AH)	(30H 31H)	(30H 36H)	[0001H] (30H 30H 30H 31H)	[0258H] (30H 32H 35H 38H)	LRC (39H 45H)	CR+LF (0DH 0AH)
1	2	2	4	4	2	2

• Response message from the slave in normal status

Header	Slave address	Function code	Data item	Data	Error check	Delimiter
(3AH)	(30H 31H)	(30H 36H)	[0001H] (30H 30H 30H 31H)	[0258H] (30H 32H 35H 38H)	LRC (39H 45H)	CR+LF (0DH 0AH)
1	2	2	4	4	2	2

• Response message from the slave in exception (error) status (When a value out of the setting range is set)
The function code MSB is set to 1 for the response message in exception (error) status [86H (38H 36H)].
The exception code 03H (30H 33H: Value out of the setting range) is returned (error).

Header	Slave address	Function code	Exception code	Error check	Delimiter
(3AH)	(30H 31H)	(38H 36H)	[03H] (30H 33H)	LRC (37H 36H)	CR+LF (0DH 0AH)
1	2	2	2	2	2

6.4.2 RTU Mode

Numerals written below the command represent the number of characters.

(1) Reading (Slave address 1, PV)

• A request message from the master
Amount of data means the data item to be read, and it is fixed as 1 (0001H).

3.5 idle characters	Slave address	Function code	Data item	Amount of data	Error check	3.5 idle characters
	(01H)	(03H)	(0080H)	(0001H)	CRC-16 (85E2H)	
	1	1	2	2	2	

• Response message from the slave in normal status [When PV=600℃ (0258H)]
The response byte count means the byte counts of data which have been read. It is fixed as 2 (02H).

3.5 idle characters	Slave address	Function code	Response byte count	Data	Error check	3.5 idle characters
	(01H)	(03H)	(02H)	(0258H)	CRC-16 (B8DEH)	
	1	1	1	2	2	

(2) Reading (Slave address 1, SV)

• A request message from the master
Amount of data means the data item to be read. It is fixed as 1 (0001H).

3.5 idle characters	Slave address	Function code	Data item	Amount of data	Error check	3.5 idle characters
	(01H)	(03H)	(0001H)	(0001H)	CRC-16 (D5CAH)	
	1	1	2	2	2	

• Response message from the slave in normal status [When SV=600℃ (0258H)]
The response byte count means the byte count of data which have been read. It is fixed as 2 (02H).

3.5 idle characters	Slave address	Function code	Response byte count	Data	Error check	3.5 idle characters
	(01H)	(03H)	(02H)	(0258H)	CRC-16 (B8DEH)	
	1	1	1	2	2	

• Response message from the slave in exception (error) status (When data item is incorrect)
The function code MSB is set to 1 for the response message in exception (error) status (83H).
The exception code (02H: Non-existent data address) is returned (error).

3.5 idle characters	Slave address	Function code	Exception code	Error check	3.5 idle characters
	(01H)	(83H)	(02H)	CRC-16 (C0F1H)	
	1	1	1	2	

(3) Setting (Slave address 1, SV)

• A request message from the master [When setting SV to 600℃ (0258H)]

3.5 idle characters	Slave address	Function code	Data item	Data	Error check	3.5 idle characters
	(01H)	(06H)	(0001H)	(0258H)	CRC-16 (D890H)	
	1	1	2	2	2	

• Response message from the slave in normal status

3.5 idle characters	Slave address (01H)	Function code (06H)	Data item (0001H)	Data (0258H)	Error check CRC-16 (D890H)	3.5 idle characters
	1	1	2	2	2	

• Response message from the slave in exception (error) status (When a value out of the setting range is set)
The function code MSB is set to 1 for the response message in exception (error) status (86H).
The exception code (03H: Value out of the setting range) is returned (error).

3.5 idle characters	Slave address (01H)	Function code (86H)	Exception code (03H)	Error check CRC-16 (0261H)	3.5 idle characters
	1	1	1	2	

7. Communication Command Table

● **Data**

Note about setting, reading command

• The data (set value, decimal) is converted to hexadecimal figures. A negative number is represented in 2's complement.
• When connecting multiple slaves, the address (instrument number) must not be duplicated.
• MODBUS protocol uses Holding Register addresses. The Holding Register addresses are created as follows. A Shinko command data item is converted to decimal number, and the offset of 40001 is added. The result is the Holding Register address.
Using Data item 0001H (SV) as an example: Data item in the sending message is 0001H, however, MODBUS protocol Holding Register address is 40002 (1 + 40001).

Setting command

• Up to 1,000,000 (one million) entries can be stored in non-volatile IC memory. If the number of settings exceeds the limit, the data will not be saved. So frequent transmission via communication is not recommended. (If a value set via software communication is the same as the value before the setting, the value will not be written in non-volatile IC memory.)
• Setting range of each item is the same as that of keypad operation.
• When the data (set value) has a decimal point, a whole number (hexadecimal) without a decimal point is used.
• If alarm type is changed in [Alarm 1 type] (0023H) and [Alarm 2 type] (0024H), the alarm value will default to 0 (zero). Alarm output status will also be initialized.
• Settings via communication are possible while in set value lock status.
• Although the options are not ordered, setting the items for the options is possible using the setting command. However, they will not function.
• Communication parameters such as Instrument Number, Communication Speed of the slave cannot be set by software communication. They can only be set via the keypad. (p.2)
• When sending a command using Global address [95 (7FH), Shinko protocol) or Broadcast address (00H, MODBUS protocol), the same command is sent to all the slaves connected. However, a response is not returned.

Reading command

• When the data (set value) has a decimal point, a whole number (hexadecimal) without a decimal point is used for a response.

● **Negative acknowledgement**

The slave will return Error code 1 (31H) (Shinko protocol) or Exception code 1 (01H) (MODBUS protocol) in the following cases.

• If Control output OFF function (0037H) is selected after selecting ‘Auto/Manual control’ in [OUT/OFF key function].
• If Auto/Manual control (0038H) is selected after selecting ‘Control output OFF function’ in [OUT/OFF key function].
• When Manual control MV (0039H) is set during automatic control.
• When AT/Auto-reset (0003H) is selected during PI control action or ON/OFF control action.

The slave will return Error code 4 (34H) (Shinko protocol) or Exception code 17 (11H) (MODBUS protocol) in the following cases.

• If ‘Cancel (0000H)’ of AT/Auto-reset (0003H) is selected while AT/Auto-reset is being cancelled.
• When ‘Perform (0001H)’ of AT/Auto-reset (0003H) is selected while AT/Auto-reset is performing.

Shinko Command Type	MODBUS Function Code	Data Item		Data
20H/50H	03H/06H	0001H	SV	Set value (Decimal point ignored)
20H/50H	03H/06H	0003H	AT/Auto-reset	0000H: Cancel 0001H: Perform
20H/50H	03H/06H	0004H	OUT1 proportional band	Set value (Decimal point ignored)
20H/50H	03H/06H	0005H	OUT2 proportional band	Set value (Decimal point ignored)
20H/50H	03H/06H	0006H	Integral time	Set value
20H/50H	03H/06H	0007H	Derivative time	Set value
20H/50H	03H/06H	0008H	OUT1 proportional cycle	Set value
20H/50H	03H/06H	0009H	OUT2 proportional cycle	Set value
20H/50H	03H/06H	000BH	Alarm 1 value	Set value (Decimal point ignored)
20H/50H	03H/06H	000CH	Alarm 2 value	Set value (Decimal point ignored)
20H/50H	03H/06H	000FH	Heater burnout alarm value	Set value (Decimal point ignored)
20H/50H	03H/06H	0012H	Set value lock	0000H: Unlock 0001H: Lock 1 0002H: Lock 2 0003H: Lock 3
20H/50H	03H/06H	0015H	Sensor correction	Set value (Decimal point ignored)
20H/50H	03H/06H	0016H	Overlap/Dead band	Set value
20H/50H	03H/06H	0018H	Scaling high limit	Set value (Decimal point ignored)
20H/50H	03H/06H	0019H	Scaling low limit	Set value (Decimal point ignored)
20H/50H	03H/06H	001AH	Decimal point place	0000H: xxxx 0001H: xxx.x 0002H: xx.xx 0003H: x.xxx
20H/50H	03H/06H	001BH	PV filter time constant	Set value (Decimal point ignored)
20H/50H	03H/06H	001CH	OUT1 high limit	Set value
20H/50H	03H/06H	001DH	OUT1 low limit	Set value
20H/50H	03H/06H	001EH	OUT1 ON/OFF hysteresis	Set value (Decimal point ignored)
20H/50H	03H/06H	001FH	OUT2 cooling method	0000H: Air cooling 0001H: Oil cooling 0002H: Water cooling
20H/50H	03H/06H	0020H	OUT2 high limit	Set value
20H/50H	03H/06H	0021H	OUT2 low limit	Set value
20H/50H	03H/06H	0022H	OUT2 ON/OFF hysteresis	Set value (Decimal point ignored)
20H/50H	03H/06H	0023H	Alarm 1 type	0000H: No alarm action 0001H: High limit alarm 0002H: Low limit alarm 0003H: High/Low limits alarm 0004H: High/Low limit range alarm 0005H: Process high alarm 0006H: Process low alarm 0007H: High limit with standby alarm 0008H: Low limit with standby alarm 0009H: High/Low limits with standby alarm
20H/50H	03H/06H	0024H	Alarm 2 type	Same as Alarm 1 type
20H/50H	03H/06H	0025H	Alarm 1 hysteresis	Set value (Decimal point ignored)
20H/50H	03H/06H	0026H	Alarm 2 hysteresis	Set value (Decimal point ignored)
20H/50H	03H/06H	0029H	Alarm 1 delay time	Set value
20H/50H	03H/06H	002AH	Alarm 2 delay time	Set value
20H/50H	03H/06H	0032H	Indication when output OFF	0000H: OFF indication 0001H: No indication 0002H: PV indication 0003H: PV+ Alarm output (Alarm 1, Alarm 2, Heater burnout alarm) active

Shinko Command Type	MODBUS Function Code	Data item		Data
20H/50H	03H/06H	0033H	SV rise rate	Set value (Decimal point ignored)
20H/50H	03H/06H	0034H	SV fall rate	Set value (Decimal point ignored)
20H/50H	03H/06H	0037H	Control output OFF function	0000H: Control output ON 0001H: Control output OFF
20H/50H	03H/06H	0038H	Auto/Manual control	0000H: Automatic control 0001H: Manual control
20H/50H	03H/06H	0039H	Manual control MV	Set value
20H/50H	03H/06H	0040H	Alarm 1 Energized/De-energized	0000H: Energized 0001H: De-energized
20H/50H	03H/06H	0041H	Alarm 2 Energized/De-energized	0000H: Energized 0001H: De-energized
20H/50H	03H/06H	0044H	Input type	0000H: K -200 to 1370℃ 0001H: K -200.0 to 400.0℃ 0002H: J -200 to 1000℃ 0003H: R 0 to 1760℃ 0004H: S 0 to 1760℃ 0005H: B 0 to 1820℃ 0006H: E -200 to 800℃ 0007H: T -200.0 to 400.0℃ 0008H: N -200 to 1300℃ 0009H: PL-Ⅱ 0 to 1390℃ 000AH: C(W/Re5-26) 0 to 2315℃ 000BH: Pt100 -200.0 to 850.0℃ 000CH: JPt100 -200.0 to 500.0℃ 000DH: Pt100 -200 to 850℃ 000EH: JPt100 -200 to 500℃
				000FH: K -320 to 2500℉ 0010H: K -320.0 to 750.0℉ 0011H: J -320 to 1800℉ 0012H: R 0 to 3200℉ 0013H: S 0 to 3200℉ 0014H: B 0 to 3300℉ 0015H: E -320 to 1500℉ 0016H: T -320.0 to 750.0℉ 0017H: N -320 to 2300℉ 0018H: PL-Ⅱ 0 to 2500℉ 0019H: C(W/Re5-26) 0 to 4200℉ 001AH: Pt100 -320.0 to 1500.0℉ 001BH: JPt100 -320.0 to 900.0℉ 001CH: Pt100 -320 to 1500℉ 001DH: JPt100 -320 to 900℉
				001EH: 4 to 20mA -2000 to 10000 001FH: 0 to 20mA -2000 to 10000 0020H: 0 to 1V -2000 to 10000 0021H: 0 to 5V -2000 to 10000 0022H: 1 to 5V -2000 to 10000 0023H: 0 to 10V -2000 to 10000
20H/50H	03H/06H	0045H	Direct/Reverse control action	0000H: Reverse (Heating) control 0001H: Direct (Cooling) control
20H/50H	03H/06H	0047H	AT bias	Set value
20H/50H	03H/06H	0048H	ARW	Set value
20H/50H	03H/06H	0049H	Heater burnout alarm 2 value	Set value (Decimal point ignored)

Shinko Command Type	MODBUS Function Code	Data item		Data
20H/50H	03H/06H	004AH	OUT1 rate-of-change	Set value
20H/50H	03H/06H	0050H	Backlight selection	0000H: All are backlit 0001H: PV Display is backlit 0002H: SV Display is backlit 0003H: Action indicators are backlit 0004H: PV+SV Displays are backlit 0005H: PV+ Action indicators are backlit 0006H: SV+ Action indicators are backlit
20H/50H	03H/06H	0051H	PV color	0000H: Green 0001H: Red 0002H: Orange 0003H: Alarm ON: Green→Red 0004H: Alarm ON: Orange→Red 0005H: PV color changes continuously 0006H: PV color changes continuously + Alarm ON; Red
20H/50H	03H/06H	0052H	PV color range	Set value (Decimal point ignored)
20H/50H	03H/06H	0053H	Backlight time	Set value
50H	06H	0070H	Key operation change flag clearing	0000H: No action 0001H: Clear all
20H	03H	0080H	PV (process variable)	Decimal point ignored.
20H	03H	0081H	OUT1 MV	Decimal point ignored.
20H	03H	0082H	OUT2 MV	Decimal point ignored.
20H	03H	0083H	SV (When SV rises or falls)	Decimal point ignored.
20H	03H	0085H	Status flag	
			0000 0000 0000 0000 2^0: OUT1 0: OFF, 1: ON (Direct current output: Not fixed) 2^1: OUT2 0: OFF, 1: ON 2^2: Alarm 1 output 0: OFF, 1: ON 2^3: Alarm 2 output 0: OFF, 1: ON 2^4: Not used (Always 0) 2^5: Not used (Always 0) 2^6: Heater burnout alarm output 0: OFF, 1: ON (In case of Sensor burnout 0: OFF) 2^7: Not used (Always 0) 2^8: Overscale 0: OFF, 1: ON 2^9: Underscale 0: OFF, 1: ON 2^{10}: Control output OFF function 0: ON, 1: OFF 2^{11}: During AT/Auto-reset 0: OFF, 1: During AT/Auto-reset 2^{12}: OUT/OFF key function 0: Control output OFF function, 1: Auto/Manual control 2^{13}: Not used (Always 0) 2^{14}: Auto/Manual control 0: Automatic control, 1: Manual control 2^{15}: Change in key operation 0: No, 1: Yes	
20H	03H	0086H	CT1 current value	Decimal point ignored.
20H	03H	0087H	CT2 current value	Decimal point ignored.

Shinko Command Type	MODBUS Function Code	Data item		Data
20H	03H	00A1H	Unit specification flag 0000 0000 0000 0000 2^0: Set value memory external selection function 0: No, 1: Yes 2^1: Serial communication function 0: No, 1: Yes 2^2: HB function 0: No, 1: Yes 2^3: HB rated current 0: 20A, 1: 50A 2^4: HB spec. 0: Single phase, 1: 3-phase 2^5: Alarm 2 output function 0: No, 1: Yes 2^6: Heat/Cool control output function 0: No, 1: Yes 2^7 to 2^{15}: Not used (Always 0) (Abbreviation: HB: Heater burnout alarm)	

● **Notes on programming monitoring software**

How to speed up the scan time

When monitoring multiple units of ACS-13A, set the program so that requisite minimum pieces of data such as Data item 0080H (PV), Data item 0081H (OUT1 MV), Data item 0085H (Status flag), can be read. For other data, set the program so that they can be read only when their set value has changed. This will speed up the scan time.

How to read the set value change made by the front keypad operation

If any set value is changed by the keypad operation, the ACS-13A will set [Status flag (0085H) 2^{15}: Change in key operation] to 1 (Yes).

There are 2 methods of reading the set value change made by the front keypad.

Reading method 1

(1) On the monitoring software side, check that [0085H (Status flag) 2^{15}: Change in key operation] has been set to 1 (Yes), then read all set values.

(2) Clear [0085H (Status flag) 2^{15}: Change in key operation], by setting Data item 0070H (Key operation change flag clearing) to 0001H (Clear all).
If Data item 0070H (Key operation change flag clearing) is set to 0001H (Clear all) during setting mode of the ACS-13A, Error code 5 (35H, Shinko protocol) or Exception Code 18 (12H, MODBUS protocol) will be returned as a negative acknowledgement. And [0085H (Status flag) 2^{15}: Change in key operation] cannot be cleared.
Set a program so that all set values can be read when a negative acknowledgement is returned.

(3) Read all set values again after acknowledgement is returned.

Reading method 2

(1) On the monitoring software side, check that [0085H (Status flag) 2^{15}: Change in key operation] has been set to 1 (Yes), then set Data item 0070H (Key operation change flag clearing) to 0001H (Clear all).

(2) Set the program depending on the acknowledgement or negative acknowledgement as follows.
When acknowledgement is returned;
Consider it as settings completed, and read all set values.
When Error code 5 (35H, Shinko protocol) or Exception code 18 (12H, MODBUS protocol) is returned as a negative acknowledgement;
Consider it as still in setting mode, and read the requisite minimum pieces of data such as Data items 0080H (PV), 0081H (OUT1 MV), 0085H (Status flag), then return to step (1).

Thus, programs which do not affect the scan time can be created using the methods described above, even if set values on the monitoring software will not be updated until settings are complete.

How to read PID parameters after auto-tuning finishes

The ACS-13A sets [0085H (Status flag) 2^{11}: AT/Auto-reset] to 1 (During AT/Auto-reset) while auto-tuning is performing. After auto-tuning is finished, PID parameters are updated.

On the monitoring software side, read the parameters such as P, I, D, ARW after checking that [0085H (Status flag) 2^{11}: AT/Auto-reset] has been set to 0 (OFF).

Note when sending all set values simultaneously

- When alarm type is changed in [Alarm 1 type (0023H)] or in [Alarm 2 type (0024H)], the alarm value will default to 0 (zero). First, send the selected alarm type, then send the alarm value.
- When input type is changed in [Input type (0044H)], the set values such as SV, OUT1 proportional band, Alarm 1 value, will be initialized. First, send the selected input type, then send other set values.

● **When Communicating with a PLC**

To communicate with a PLC, use a Shinko PLC Interface Unit SIF-600.
No programming is needed for connection.

PLCs corresponding to the SIF-600, its manufacturer and host link units:

PLC Manufacturer	PLC Model, Series Name	Host Link Unit Model
Mitsubishi Electric Corp.	MELSEC Q, QnA series (*)	AJ71UC24, A1SJ71UC24-R2/R4/PRF A1SJ71C24-R2/R4/PRF, QJ71C24
	MELSEC FX series (*)	
Omron Corp.	SYSMAC CJ series	CS1W-SCU21-V1 CJ1W-SCU21, CJ1W-SCU41
Keyence Corp.	KV	KV-L20V
Yokogawa Electric Corp.	FA-M3	F3LC11-2N, F3LC11-1F, F3LC12-1F
Fuji Electric Co., Ltd.	MICREX-SX series	NP1L-RS1, NP1L-RS2, NP1L-RS3 NP1L-RS4

(*) Models with compatible QR/QW communication commands

8. SV Digital Transmission

By connecting to Shinko programmable controllers PCA1 or PCB1 (on which 'SV digital transmission' is selected in [Communication protocol]), Step SV can be received from the programmable controllers.

8.1 Wiring

For SV digital transmission, connect YA(-) to YA(-), YB(+) to YB(+), SG to SG terminals respectively in the same way as the Serial communication (RS-485). Up to 31 units of the ACS-13A can be connected.
The following shows a connection example of PCB1 and ACS-13A units.

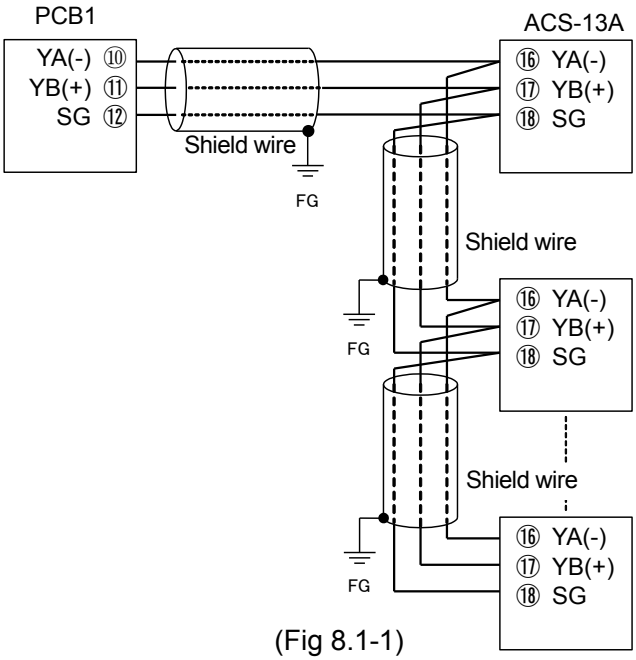

(Fig 8.1-1)

8.2 Setting Method of Each Instrument

(1) Setting the PCA1 or PCB1

Select ‘SV digital transmission’ in [Communication protocol].

(2) Setting the ACS-13A

Check the following in Auxiliary Function Setting Mode. (Refer to Section ‘3. Communication Parameter Setting’.)

- ‘Shinko protocol’ has been selected in [Communication protocol].
- Communication speed of the ACS-13A is equal to that of the PCA1 or PCB1.

(3) Starting SV digital transmission

Enter the program setting values on the PCA1 or PCB1.

If the program is executed by pressing the RUN key, the Step SV of the PCA1 or PCB1 will be sent to the ACS-13A.

During program standby, 0 (zero) will be sent to the ACS-13A.

9. Specifications

<table>
<tr><td>Cable length</td><td colspan="4">1.2 km (Maximum), Cable resistance: Within 50 Ω
(Terminators are not necessary, but if used, use 120 Ω minimum on both sides.)</td></tr>
<tr><td>Communication line</td><td colspan="4">EIA RS-485</td></tr>
<tr><td>Communication method</td><td colspan="4">Half-duplex communication</td></tr>
<tr><td>Communication speed</td><td colspan="4">2400, 4800, 9600, 19200 bps (Selectable by keypad)</td></tr>
<tr><td>Synchronization method</td><td colspan="4">Start-stop synchronization</td></tr>
<tr><td>Code form</td><td colspan="4">ASCII, Binary</td></tr>
<tr><td>Data bit/Parity</td><td colspan="4">8 bits/No parity, 7 bits/No parity, 8 bits/Even, 7 bits/Even, 8 bits/Odd, 7 bits/Odd
(Selectable by keypad)</td></tr>
<tr><td>Stop bit</td><td colspan="4">1 bit, 2 bits (Selectable by keypad)</td></tr>
<tr><td>Communication protocol</td><td colspan="4">Shinko protocol, MODBUS ASCII, MODBUS RTU (Selectable by keypad)。</td></tr>
<tr><td rowspan="5">Data format</td><td colspan="4">Differs depending on the communication protocol.</td></tr>
<tr><td>Communication Protocol</td><td>Shinko Protocol</td><td>MODBUS ASCII</td><td>MODBUS RTU</td></tr>
<tr><td>Start bit</td><td>1</td><td>1</td><td>1</td></tr>
<tr><td>Data bit</td><td>7</td><td>7 (8)
Selectable</td><td>8</td></tr>
<tr><td>Parity</td><td>Even</td><td>Even (No parity, Odd)
Selectable</td><td>No parity (Even, Odd)
Selectable</td></tr>
<tr><td>Stop bit</td><td>1</td><td>1 (2)
Selectable</td><td>1 (2)
Selectable</td></tr>
<tr><td>Number of connectable units</td><td colspan="4">Maximum 31 units to 1 host computer</td></tr>
<tr><td>Error correction</td><td colspan="4">Command request repeat system</td></tr>
<tr><td>Error detection</td><td colspan="4">Parity check, Checksum (Shinko protocol), LRC (MODBUS ASCII),
CRC-16 (MODBUS RTU)</td></tr>
<tr><td>Digital external setting</td><td colspan="4">Step SV can be received from Shinko programmable controllers PCA1 or PCB1 (‘SV digital transmission’ should be selected in [Communication protocol] on the PCA1 or PCB1).</td></tr>
</table>

10. Troubleshooting

Check that power is being supplied to the master and slave that customers use.
If communication failure still occurs, check the following.

Problem	Possible Cause	Solution
Communication failure	Communication cable is not securely connected, or is disconnected/defective.	Check the communication cable and connector.
	Incorrect wiring of the communication cable and/or connector	Check the communication cable and connector. See Section '2. Wiring' (p.1).
	Imperfect contact between the communication cable and the connector, or between the communication connector and instrument port	Check the communication cable and connector.
	Communication speed of the slave does not match that of the master.	Check the communication speed of the master and slave. See Section '3. Communication Parameter Setting' (p.2).
	The data bit, parity and stop bit of the master do not correspond to those of the slave.	Check the data bit, parity and stop bit of the master and slave. See Section '3. Communication Parameter Setting' (p.2).
	The instrument number (address) of the slave does not correspond to that of the command.	Check the instrument number (address) of the slave and command. See Section '3. Communication Parameter Setting' (p.2).
	The instrument numbers (addresses) are duplicated in multiple slaves.	Check the instrument numbers (addresses) of the slave. See Section '3. Communication Parameter Setting' (p.2).
	Make sure that the program is appropriate for the transmission timing.	Check the program. See Section '4. Communication Procedure' (pp.2, 3).
Although communication is occurring, the response is negative acknowledgement.	A non-existent command code has been sent.	Check the command code.
	The setting command data exceeds the setting range of the slave.	Check the setting range of the slave.
	The ACS-13A cannot be set when functions such as AT are performing.	Check the slave status.
	The ACS-13A is in front keypad operation setting mode.	Return the instrument to RUN mode.

For all other malfunctions, please contact our main office or dealers.

SHINKO TECHNOS CO., LTD.
OVERSEAS DIVISION

Head Office : 2-5-1, Senbahigashi, Minoo, Osaka, Japan
URL: http://www.shinko-technos.co.jp
E-mail: overseas@shinko-technos.co.jp
Tel : +81-72-727-6100
Fax: +81-72-727-7006